SPD

电涌保护器（光伏系统）

Surge Protective Device (PV System)

- 用于直流/光伏直流系统
- 满足IEC 61643-31的Class I 和 和Class II 要求
- 依据UL 1449/IEC 61634-31标准设计制造
- 过温保护
- 过流保护
- 高可靠性

- For DC / PVDC System
- Class I and Class II SPD
- Comply with UL 1449 and IEC 61643-31
- Over-temperature Protection,
  Over-current Protection,
  High Reliability

SET safe | SET fuse

赛尔特

制造电路控制及安全保护元器件 提供电路安全解决方案

Providing a Total Solution for High Standard Safety Circuit Protection

光伏系统用电涌保护器
SPD for Photovoltaic System

- 光伏逆变器 Photovoltaic Inverter
- 分布式电源 DPU
- 直流防雷箱 DC Lightning Protection Box
- 直流电源 DC Power Supply
- 储能变流器 Energy Storage Converter
- 直流汇流箱 DC Junction Box

厦门赛尔特电子有限公司版权所有
All Rights Reserved by Xiamen SET Electronics Co., Ltd. 2021-2023 V2.0

术语 Glossary

项目 Item	定义 Description
U_{cpv}	**光伏应用下的最大持续工作电压　Maximum Continuous Operating Voltage for PV application** 可连续地施加在SPD上的最大直流电压。 Maximum DC voltage, which may be continuously applied to the SPD's mode of protection. — (IEC 61643-31)
8/20 μs	**8/20 μs 冲击电流　Current Impulse** 视在波前时间为8μs，半峰值时间为20μs的冲击电流。 Current impulse with a nominal virtual front time of 8 μs and a nominal time to half-value of 20 μs. — (IEC 61643-31)
1.2/50 μs	**1.2/50 冲击电压　Voltage Impulse** 视在波前时间为1.2μs，半峰值时间为50μs 的冲击电压。 Voltage impulse with a nominal virtual front time of 1.2 μs and a nominal time to half-value of 50 μs. — (IEC 61643-31)
I_{imp}	**I 类试验的冲击电流　Impulse Discharge Current for Class I Test** I_{imp}由三个参数来定义：电流峰值 I R peak R 、电荷量 Q 和比能量 W/R。 Crest value of a discharge current through the SPD with specified charge transfer Q and specified energy W/R in the specified time. — (IEC 61643-31)
I_n	**标称放电电流　Nominal Discharge Current** 流过SPD具有8/20波形电流的峰值。 Crest value of the current through the SPD having a current waveshape of 8/20. — (IEC 61643-31)
I_{max}	**最大放电电流　Maximum Discharge Current** 具有 8/20 波形和制造厂声称幅值的流过SPD电流的峰值。I_{max}等于或大于I_n。 Crest value of a current through the SPD having an 8/20 waveshape and magnitude according to the manufacturers specification. I_{max} is equal to or greater than I_n. — (IEC 61643-31)
U_p	**电压保护水平　Voltage Protection Level** 由于施加规定陡度的冲击电压和规定幅值及波形的冲击电流而在SPD两端之间预期出现的最大电压。 Maximum voltage to be expected at the SPD terminals due to an impulse stress with defined voltage steepness and an impulse stress with a discharge current with given amplitude and waveshape. — (IEC 61643-31)
Modes of protection	**保护模式　Modes of protection** 在端子间保护保护元器件的电流路径，由制造商指定。 An intended current path, between terminals that contains protective components, which the manufacturer declares a protection level. — (IEC 61643-31)
IP	**外壳防护等级　Degrees of Protection Provided** 外壳提供的防止触及危险的部件、防止外界的固体异物进入和/或防止水的进入壳内的防护程度。 Classification preceded by the symbol IP indicating the extent of protection provided by an enclosure against access to hazardous parts, against ingress of solid foreign objects and possibly harmful ingress of water. — (IEC 61643-31)

SPD

厦门赛尔特电子有限公司版权所有
All Rights Reserved by Xiamen SET Electronics Co., Ltd. 2021-2023 V2.0

型号说明 Part Numbering System

SD 25 T 100 L 2 11 PV -xxx

其他选项 Other Options

特殊功能代码 Modes of Protection
PV：用于光伏系统 For PV systems

接线形式 Wire Connection
11：U型接线 U - line
12：Y型接线 Y - line

特性参数代码 Characteristic code
1：1种保护模式 One protection mode
2：2种保护模式 Two protection modes
3：3种保护模式 Three protection modes

电路特征 Circuit Characteristic
L：1+1或3+1等特殊的保护模式
Modes of protection is 1+1 or 3+1 and so on

标称系统电压 Nominal System Voltage
100 V, 200 V, 300 V, 400 V

设计系列 Design Sequence

标称放电电流 Nominal Discharge Current
25：25 kA

产品类别 Product Category

认证信息 Agency Information

认证信息 Agency Information		标准 Standards	档案号 NO.	类别 Category
	UL	UL 1449 4th Edition	E322662	VZCA2
	CUL	CSA C22.2 NO.269, CSA ECN 516	E322662	VZCA8
	TUV	IEC/EN 61643-11, IEC/EN 61643-31	详见具体型号	

厦门赛尔特电子有限公司版权所有
All Rights Reserved by Xiamen SET Electronics Co., Ltd. 2021-2023 V2.0

注意
ATTENTION

使用方法 Usage

1. 持续施加在SPD上的电压不应超过其最大连续工作电压U_c。
   The voltage applied continuously to the SPD can not exceed its maximum continuous operating voltage U_c.
2. 气压在 45 kPa 到106 kPa，对应海拔为+2000 m至- 500 m。
   When atmosphere press is from 45 kPa to 106 kPa, the related altitude shall be from +5000 m to -500 m.
3. 通电情况下请勿直接触碰本体或引脚，防止触电。
   Do not touch the product body or pins directly when power is on, to avoid electric shock.

更换 Replacement

基于安全原因，电涌保护器是不可修复的产品，替换时应使用同类别同型号的产品。
SPD is a non-repairable product. For safety sake, please use equivalent SPD for replacement.

存贮 Storage

电涌保护器的贮存应避免高温、高湿、日光直射和腐蚀性气体的场合，避免引线氧化。产品购入后请于2年内使用完。
Please store the SPD without high temperature, high humidity or corrosive gas. To avoid oxidation of the lead wires, please use them up within 2 years after receiving the goods.

厦门赛尔特电子有限公司版权所有
All Rights Reserved by Xiamen SET Electronics Co., Ltd. 2021-2023 V2.0

安装 Installation

1. 仅专业电气人员可进行相关安装和调试。必须遵守相关国家的法规。
   Installation and startup may only be carried out by qualified personnel. The relevant country-specific regulations must be observed.
2. 安装前请务必检查设备是否有外部破损。如设备有缺陷，则不得使用。
   Check the device for external damage before installation. If the device is defective, it must not be used.
3. 注意触电危险。请在安装使用前断开电源。
   Pay attention to risk of electric shock. Please cutoff all electrical power before installation or service.
4. 连接至电涌保护装置 （SPD）的输出电缆应尽可能短，避免形成回路。
   Lay the output cables to the surge protective devices (SPDs) as short as possible, without loops.
5. 安装过程和安装后不宜对电涌保护器本体施加机械应力。
   Do not apply mechanical stress to the SPD body during or after the installation.

维护 Maintenance

1. 每年在雷雨季节的前后根据说明检查SPD的状态 。
   Check SPD status according to instructions before and after the thunderstorm season each year.
2. 如果出现”故障状态”的指示，则表示SPD损坏。 请用相同型号的SPD替换。
   If the indicator of "failure state" appears, the SPD is damaged. Replace the SPD with same type.
3. 电路通电前确保电气连接和安装正确。
   Ensure electrical connections and mountings are correct before energizing the circuit.
4. 产品在出厂前均经过严格的检验和质量控制，如发现工作异常，请及时与本公司联系
   SPD`s quality is well controlled and strictly inspected before delivery. If non-functional ones are found during operation, please contact us early enough.

SPD

厦门赛尔特电子有限公司版权所有
All Rights Reserved by Xiamen SET Electronics Co., Ltd. 2021-2023 V2.0

接线示意图 Wiring Diagram

光伏系统 Photovoltaic system

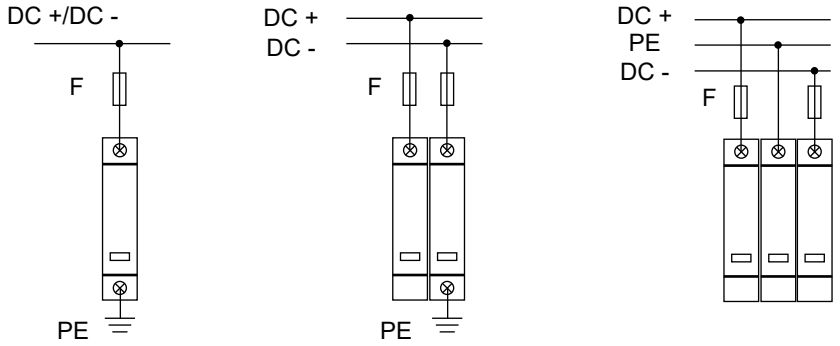

"I" 接线 Connection　　"U" 接线 Connection　　"Y" 接线 Connection

技术参数 Specifications

技术特性 Features	技术参数 Specifications
外壳防护等级 Degrees of Protection Provided	IP20
接线能力 Wiring Ability	(1.5 to 25) mm^2(柔性 Flexible) / 35 mm^2(刚性 Rigid)
安装方式 Installation	35 mm 导轨 DIN rail 35 mm
告警方式 Alarm	遥信+指示窗 Remote + Indicator
状态指示 Operating State / Fault Indication	绿色 / 红色 Green / Red
遥信触点 Remote Indication Contacts	AC: 250 V / 0.5 A , 125 V / 1.0 A DC: 250 V / 0.1 A , 125 V / 0.2 A , 75 V / 0.5 A
遥信接线导体截面 Cross-section of Remote Indication Conductors	1.5 mm^2
额定短路电流 Short Current Rating I_{SCCR}	1000 A
标准 According to Standard	UL 1449, EN 61643-31
海拔 Altitude	0 ~ 5000 m
工作温度 Operational Temperature Range	(-40 to 85) °C

厦门赛尔特电子有限公司版权所有
All Rights Reserved by Xiamen SET Electronics Co., Ltd. 2021-2023 V2.0

电涌保护器 SPD
Surge Protective Device

SD25TxxxL211PV

尺寸 Dimensions (mm)

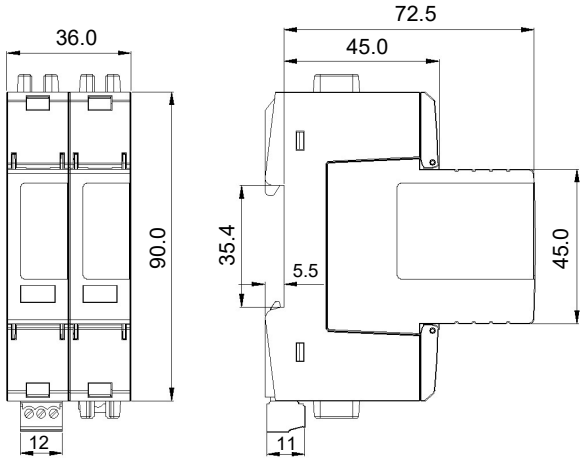

电路原理图 Schemat-

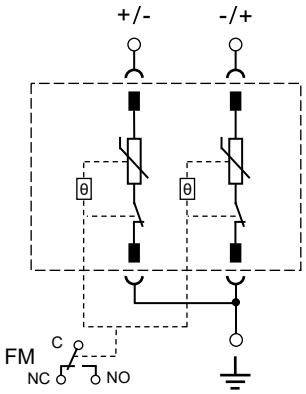

- 用于光伏直流及直流系统 For DC / PVDC System
- I类和II类电涌保护器 Class I and Class II SPD
- 过热、过流保护，高可靠性 Over-temperature Protection, Overcurrent Protection, High Reliability
- 满足IEC 61643-31 和UL 1449标准 Comply with IEC 61643-31 and UL 1449

技术参数 Specifications

型号 Model	标称系统电压 Nominal System Voltage (U_n)	光伏应用下的最大持续工作电压 Maximum Continuous Operating Voltage for PV application (U_{cpv})	冲击放电电流 Impulse Discharge Current (10/350 μs) (I_{imp})	标称放电电流 Nominal Discharge Current (8/20 μs) (I_n)	最大放电电流 Max. Discharge Current (8/20 μs) (I_{max})	电压保护水平 Voltage Protection Level (U_p)	保护模式 Modes of Protection	SPD 类型 Type
SD25T100L211PV	100 VDC	180 VDC	12.5 kA	25 kA	50 kA	1.0 kV	+/- — PE	T1+T2
SD25T200L211PV	200 VDC	250 VDC	12.5 kA	25 kA	50 kA	1.3 kV		
SD25T300L211PV	300 VDC	330 VDC	12.5 kA	25 kA	50 kA	1.5 kV		
SD25T400L211PV	400 VDC	450 VDC	11 kA	25 kA	50 kA	2.0 kV		
SD25T500L211PV	500 VDC	550 VDC	10 kA	25 kA	50 kA	2.1 kV		
SD25T600L211PV	600 VDC	670 VDC	7.5 kA	25 kA	50 kA	2.5 kV		
SD25T800L211PV	800 VDC	895 VDC	5.0 kA	25 kA	50 kA	3.2 kV		

厦门赛尔特电子有限公司版权所有
All Rights Reserved by Xiamen SET Electronics Co., Ltd. 2021-2023 V2.0

电涌保护器 SPD
Surge Protective Device

SD25TxxxL312PV

尺寸 Dimensions (mm)

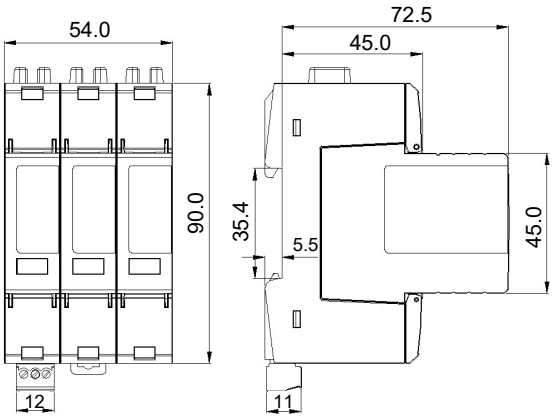

电路原理图 Schemat-

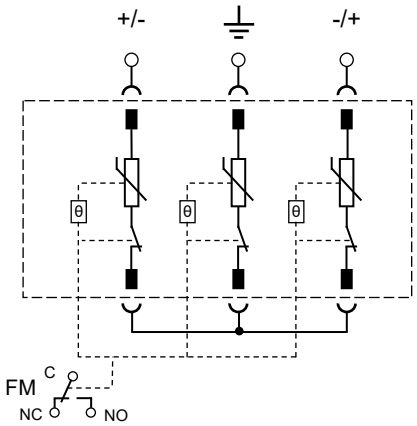

- 用于光伏直流及直流系统 For DC / PVDC System
- I类和II类电涌保护器 Class I and Class II SPD
- 过热、过流保护，高可靠性 Over-temperature Protection, Overcurrent Protection, High Reliability
- 满足IEC 61643-31 和UL 1449标准 Comply with IEC 61643-31 and UL 1449

技术参数 Specifications

型号 Model	标称系统电压 Nominal System Voltage (U_n)	光伏应用下的最大持续工作电压 Maximum Continuous Operating Voltage for PV application (U_{cpv})	冲击放电电流 Impulse Discharge Current (10/350 μs) (I_{imp})	标称放电电流 Nominal Discharge Current (8/20 μs) (I_n)	最大放电电流 Max. Discharge Current (8/20 μs) (I_{max})	电压保护水平 Voltage Protection Level (U_p)	保护模式 Modes of Protection	SPD 类型 Type
SD25T600L312PV	600 VDC	660 VDC	12.5 kA	25 kA	50 kA	3.0 kV	Y	T1+T2
SD25T800L312PV	800 VDC	900 VDC	11.0 kA	25 kA	50 kA	4.0 kV		
SD25T1000L312PV	1000 VDC	1000 VDC	10.0 kA	25 kA	50 kA	4.2 kV		
SD25T1200L312PV	1200 VDC	1200 VDC	7.5 kA	25 kA	50 kA	5.0 kV		
SD25T1500L312PV	1500 VDC	1500 VDC	5.0 kA	25 kA	50 kA	6.4 kV		

厦门赛尔特电子有限公司版权所有
All Rights Reserved by Xiamen SET Electronics Co., Ltd. 2021-2023 V2.0

电涌保护器 SPD
Surge Protective Device

SD25TS 系列 Series

电路原理图 Schemat-

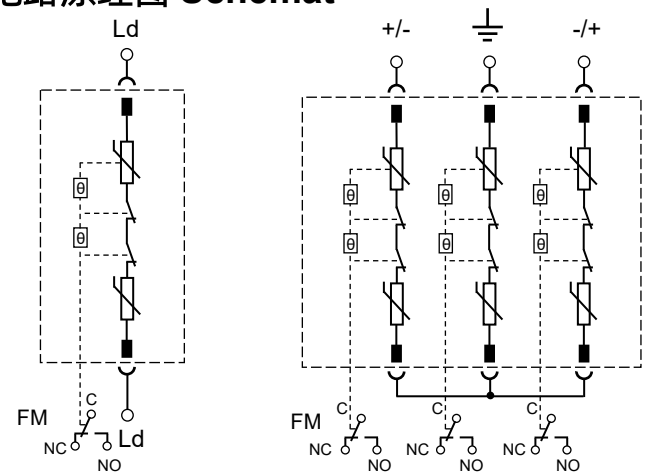

SD25TS900L100PV　　SD25TS1500L312PV

- 用于光伏直流及直流系统　For DC / PVDC System
- I类和II类电涌保护器　Class I and Class II SPD
- 过热、过流保护，高可靠性　Over-temperature Protection, Overcurrent Protection, High Reliability
- 满足IEC 61643-31 和UL 1449标准　Comply with IEC 61643-31 and UL 1449

尺寸 Dimensions (mm)

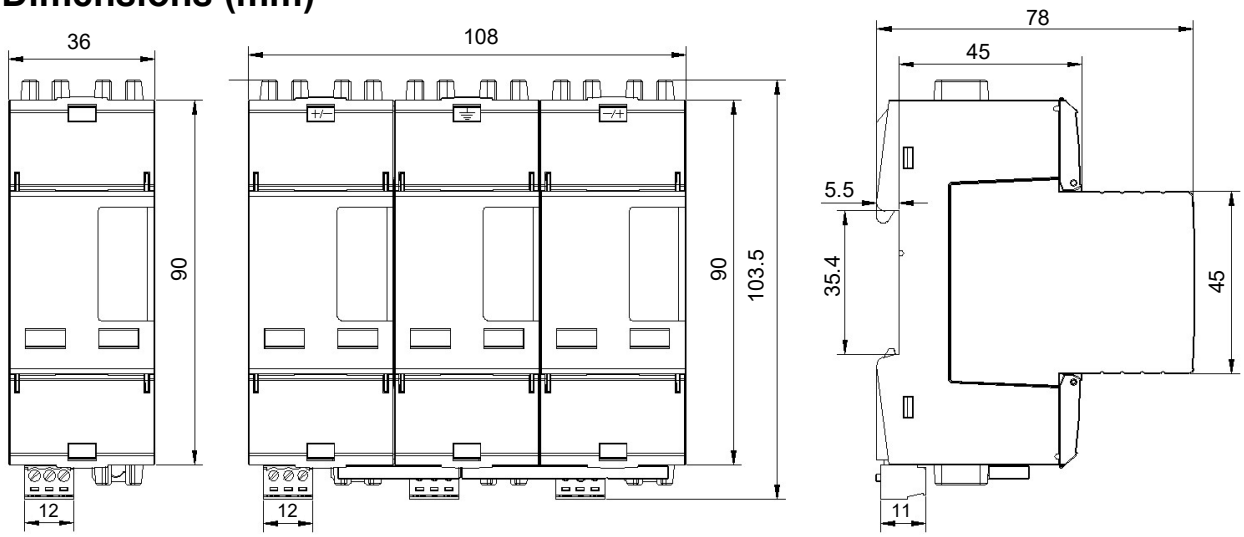

SD25TS900L100PV　　SD25TS1500L312PV

技术参数 Specifications

型号 Model	标称系统电压 Nominal System Voltage (U_n)	光伏应用下的最大持续工作电压 Maximum Continuous Operating Voltage for PV application (U_{cpv})	冲击放电电流 Impulse Discharge Current (10/350 μs) (I_{imp})	标称放电电流 Nominal Discharge Current (8/20 μs) (I_n)	最大放电电流 Max. Discharge Current (8/20 μs) (I_{max})	电压保护水平 Voltage Protection Level (U_p)	保护模式 Modes of Protection	SPD 类型 Type
SD25TS900L100PV	900 VDC	900 VDC	12.5 kA	25 kA	50 kA	3.2 kV	1P (Ld - Ld)	T1+T2
SD25TS1500L312PV	1500 VDC	1500 VDC	12.5 kA	25 kA	50 kA	6.4 kV	Y	

厦门赛尔特电子有限公司版权所有
All Rights Reserved by Xiamen SET Electronics Co., Ltd. 2021-2023 V2.0

www.SETsafe.com
www.SETfuse.com

20+

OVER 20 YEARS OF DESIGNING, MANUFACTURING AND SELLING OF CIRCUIT PROTECTION COMPONENTS
超过20年的设计、制造、销售电路保护元器件

40+

SOLD TO MORE THAN 40 COUNTRIES AND REGIONS
40多个国家和地区的客户选择赛尔特品牌

自动化

AUTOMATIC PROCESS PRODUCTION
自动化工序生产

500

A BRAND CHOSEN BY FORTUNE 500 COMPANIES
世界500强企业选择品牌

厦门火炬高新区（翔安）产业区翔安西路8067, 8001号
NO. 8067, 8001 West Xiang'an Road,Torch High-tech industrial District, Xiang'an 361101 Xiamen P.R. China
www.SETsafe.com www.SETfuse.com
+ 86 592-5715-838 sales@SETfuse.com

厦门赛尔特电子有限公司版权所有
All Rights Reserved by Xiamen SET Electronics Co., Ltd. V2.0 2021-2023

SET safe | SET fuse
赛尔特