热保护型压敏电阻 TFMOV

Thermally Protected Varistors

特性 Features

- 高可靠性 High Reliability
- 小体积 Small Size
- 失效指示遥信引脚
  Remote Signal Contact for Failure Indication
- 高通流量 High Energy Capacity
- 密封材料阻燃等级V0
  Sealing Material, Flame-retardant to V0 (UL 94)
- 依据UL 1449 / IEC 61643-11 设计制造
  Comply with UL 1449 / IEC 61643-11

应用 Applications

- 通信设备 Telecom Equipment
- 组串逆变器 String Inverter in Photovoltaic System
- 交直流电源 AC / DC Power Supply
- 不间断电源 Uninterruptable Power Supply (UPS)
- 电涌保护器 Surge Protective Device (SPD)
- 电表 Electric Meter
- 电源分配单元 Power Distribution Unit (PDU)

厦门赛尔特电子有限公司版权所有
All Rights Reserved by Xiamen SET Electronics Co., Ltd. 2021-2023 V3.1

热保护型压敏电阻 TFMOV
Thermally Protected Varistors

SETsafe | SETfuse

热保护型压敏电阻 (TFMOV)-机械脱扣型特性与型号概览
Thermally Protected Varistors (TFMOV) Feature & Model List Overview

额定电压 Rated Voltage U_n (V) AC		额定电压 Rated Voltage U_n (V) DC	型号 Model 5	型号 Model 10	型号 Model 20	型号 Model 20	最大连续工作电压 Maximum Continuous Operating Voltage U_n (V) AC	最大连续工作电压 Maximum Continuous Operating Voltage U_n (V) DC
690V	600V		TFMOV05M750	○	TFMOV20M750	○	750	1000
			TFMOV05M680	TFMOV10M680	TFMOV20M680	TFMOV25M680TI	680	895
			TFMOV05M625	TFMOV10M625	TFMOV20M625	TFMOV25M625TI	625	825
480V			○	○	○	TFMOV25M575TI	575	745
			TFMOV05M550	TFMOV10M550	TFMOV20M550	TFMOV25M550TI	550	670
	400V		TFMOV05M510	TFMOV10M510	TFMOV20M510	TFMOV25M510TI	510	615
347V			TFMOV05M460	TFMOV10M460	TFMOV20M460	○	460	560
			○	○	○	TFMOV25M440TI	440	505
			TFMOV05M420	TFMOV10M420	TFMOV20M420	○	420	460
	254 - 277V		TFMOV05M385	TFMOV10M385	TFMOV20M385	TFMOV25M385TI	385	415
220 - 230V			TFMOV05M350	TFMOV10M350	TFMOV20M350	○	350	385
			TFMOV05M320	TFMOV10M320	TFMOV20M320	○	320	350
		300V	TFMOV05M300	TFMOV10M300	TFMOV20M300	○	300	320
			TFMOV05M275	TFMOV10M275	TFMOV20M275	○	275	300
			TFMOV05M250	TFMOV10M250	TFMOV20M250	○	250	275
	120 - 130V	220V	TFMOV05M230	TFMOV10M230	TFMOV20M230	○	230	250
			TFMOV05M210	TFMOV10M210	TFMOV20M210	○	210	225
			TFMOV05M190	TFMOV10M190	TFMOV20M190	○	190	200
			TFMOV05M175	TFMOV10M175	TFMOV20M175	○	175	180
		110V	TFMOV05M150	TFMOV10M150	TFMOV20M150	○	150	170
110V			TFMOV05M140	TFMOV10M140	TFMOV20M140	○	140	150
			TFMOV05M130	TFMOV10M130	TFMOV20M130	○	130	125
			TFMOV05M115	TFMOV10M115	TFMOV20M115	○	115	100
	60V	60V	TFMOV05M95	TFMOV10M95	TFMOV20M95	○	95	85
48V			TFMOV05M75	TFMOV10M75	TFMOV20M75	○	75	65
		48V	TFMOV05M60	TFMOV10M60	TFMOV20M60	○	60	56
	36V		TFMOV05M50	TFMOV10M50	TFMOV20M50	○	50	45
			○	○	○	○	40	38
24V		24V	○	○	○	○	35	31
			○	○	○	○	30	26
12V		12V	○	○	○	○	25	22
AC		DC	5	10	20	20	AC	DC

标称放电电流 Nominal Discharge Current I_n (kA)

+86-592-571-5838 www.SETfuse.com www.SETsafe.com E-mail : sales@SETfuse.com

All Rights Reserved by Xiamen SET Electronics Co., Ltd. 2021-2023 V3.1
厦门赛尔特电子有限公司版权所有

热保护型压敏电阻 TFMOV
Thermally Protected Varistors

产品描述 Description

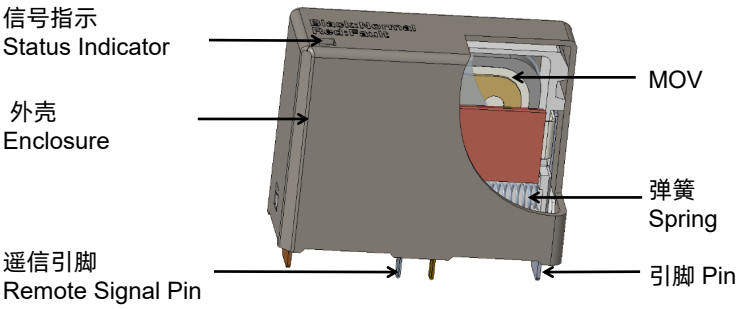

TFMOV(远程监控 Remote Monitoring)
机械脱扣 Mechanical trip

热保护型压敏电阻（TFMOV）是压敏电阻与热保护脱离部件的组合。压敏电阻存在老化特性，热保护型压敏电阻能够在压敏电阻（MOV）劣化或失效时，通过热保护部件的动作将压敏电阻从主回路中脱离。常用于光伏逆变器，通信设备，机房电源等对可靠性和耐候性要求高的场所。

TFMOV is a combination of varistors (MOV) and thermal protection component. Since varistor has the characteristics of aging or degrading; TFMOV can separate the varistor from the main circuitry by opening the thermal protection component when the varistor (MOV) degrades or fails. It is often used in which requires high reliability and weather withstanding, such as photovoltaic inverters, communication equipment, and power supplies in data centers, etc.

电气原理图 Schematics

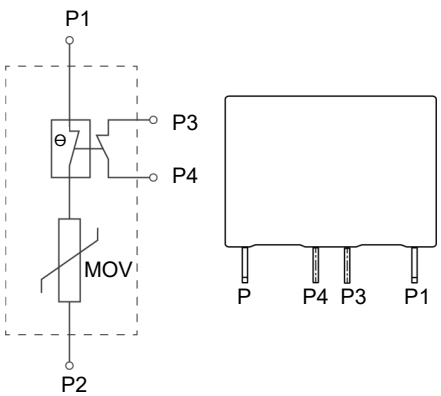

TFMOV(远程监控 Remote Monitoring)
机械脱扣 Mechanical trip

厦门赛尔特电子有限公司版权所有
All Rights Reserved by Xiamen SET Electronics Co., Ltd. 2021-2023 V3.1

压敏电阻工作原理 MOV Operation Principle

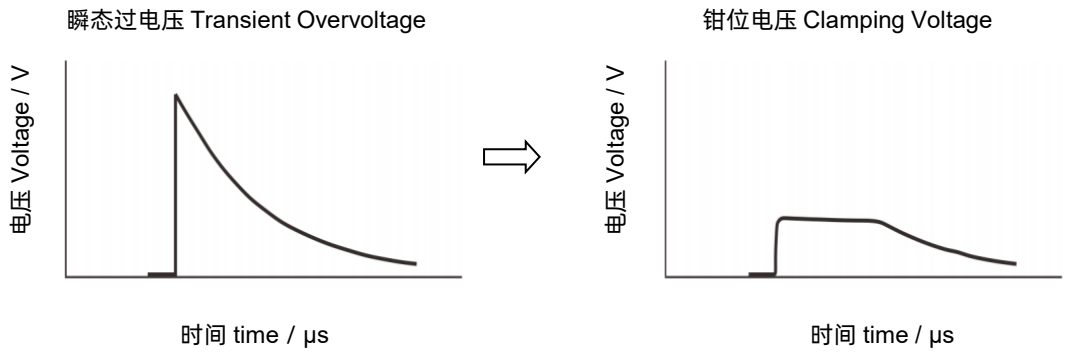

热保护压敏电阻　Thermal Protection MOV

图a为电源常用的电涌保护电路，采用MOV来抑制电涌电压，保护后级电路。由于压敏电阻在劣化或失效时，存在燃烧的风险。在图b高可靠性电涌保护电路中，为了提高电路安全性，采用热保护型压敏电阻TFMOV作为浪涌电压保护元件。热保护型压敏电阻（TFMOV）是压敏电阻与热保护脱离部件的组合。在MOV 温度异常超限时，温度保险丝会先断开，从而使MOV的失效模式呈现开路失效。

Figure a is a surge protection circuit commonly used in power supplies. MOV is used to suppress the surge voltage and protect the subsequent circuit. There is a risk of burning when the varistor degrades or fails. In the high-reliability surge protection circuit of Figure b, in order to improve the safety of the circuit, a thermal protection varistor TFMOV is used as the surge voltage protection element. TFMOV is a combination of varistors (MOV) and thermal protection component. When the temperature of the MOV is abnormally exceeded, the thermal fuse will be opened first, so that the failure mode of the MOV appears to be open-circuit failure.

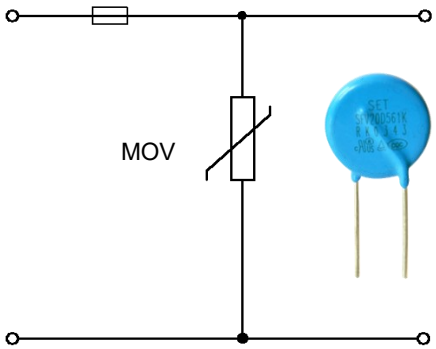

图a 电涌保护典型电路
Figure a Typical surge protection circuit

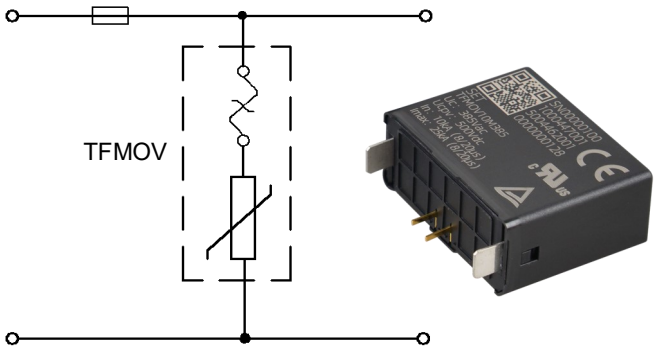

图b 电涌保护高可靠性电路
Figure b: High reliability surge protection circuit

厦门赛尔特电子有限公司版权所有
All Rights Reserved by Xiamen SET Electronics Co., Ltd. 2021-2023 V3.1

热保护型压敏电阻 TFMOV
Thermally Protected Varistors

优势 Benefits

安全 Safety

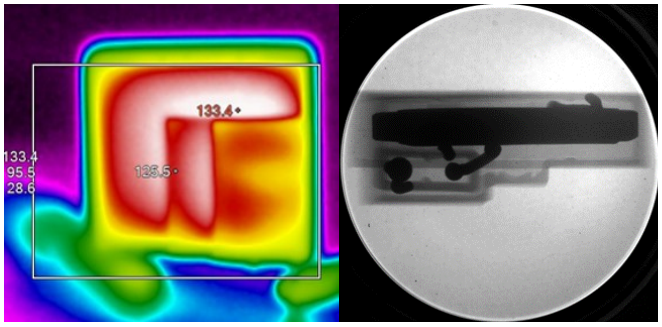

模拟TFMOV劣化失效
TFMOV Failure Simulation

TFMOV利用温度保险丝受热熔断的特性，在压敏电阻电性能劣化的过程中，当漏电流才达到数十毫安时，温度保险丝断开，形成如上图所示的开路失效，是可接受的安全失效。

During the electrical performance degrading of varistor, the inbuilt ATCO will open the circuit when the leakage current of varistor increases to tens of micro Amperes. As shown in the figure above, this is a safe open circuit failure.

安全隐患 Hidden Danger

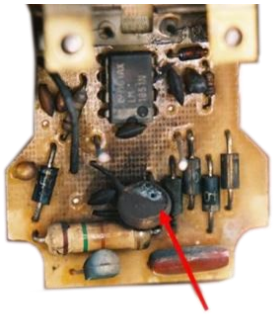

压敏电阻穿孔
Hole in Varistor

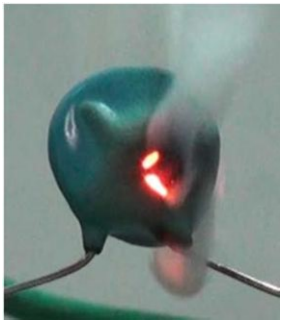

模拟MOV劣化失效
MOV Failure Simulation

众所周知，压敏电阻在使用过程中会出现电性能劣化，绝大多数会呈现压敏电压下降、漏电流增加，因热量累积导致温度剧升，使得压敏电阻出现如上图的热击穿而短路失效，存在安全隐患！

The electrical performance of varistor degrades with operating, mostly the varistor voltage drops, and leakage current increases. The heat accumulation can cause the temperature increase sharply and varistor results in thermal breakdown to short circuit status. It's very dangerous.

TFMOV

厦门赛尔特电子有限公司版权所有
All Rights Reserved by Xiamen SET Electronics Co., Ltd. 2021-2023 V3.1

型号说明 Part Numbering System

TFMOV 10 M 385 - 4 - 001

其他选项 Other Options

引脚数量 Pin No.
4：带遥信引脚
With Signal Contact

最大连续工作电压
Max. Continuous Operating Voltage
385: 385 VAC

设计序列 Design Sequence

标称放电电流 Nominal Discharge Current
10：10 kA, 20: 20 kA

产品类别 Product Category

备注 Note：
引脚数量和其他选项仅作为内部唯一规格的识别编码，不作为产品型号一部分.
Pin number and other options are used only as identification codes for internal unique specifications and are not part of the product model

TFMOV

厦门赛尔特电子有限公司版权所有
All Rights Reserved by Xiamen SET Electronics Co., Ltd. 2021-2023 V3.1

标称放电电流 Nominal Discharge Current

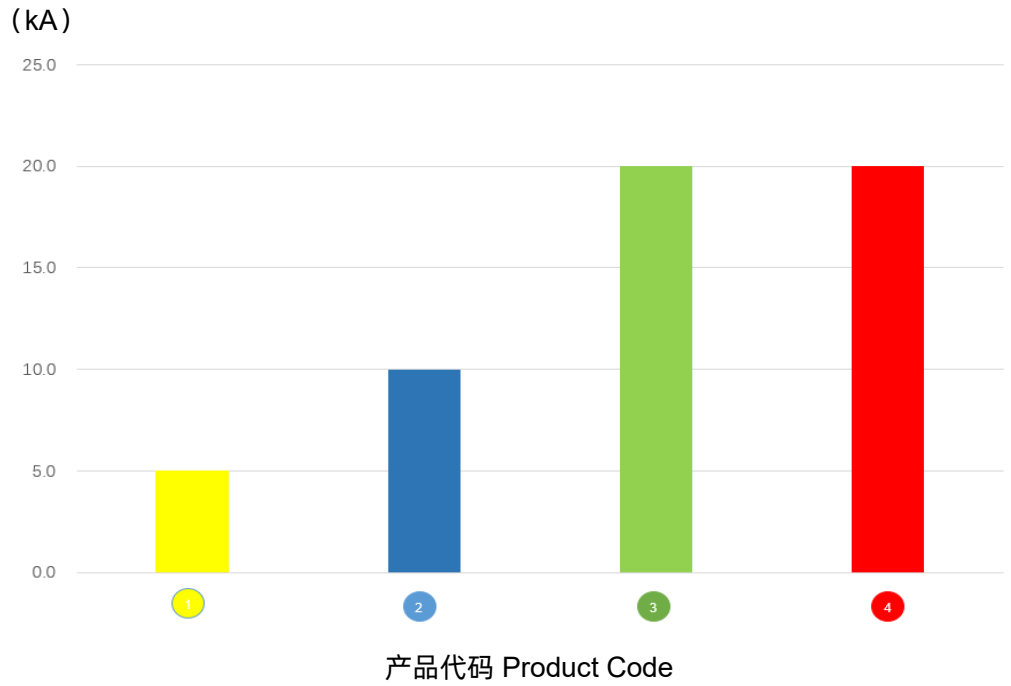

1 TFMOV05M Series
2 TFMOV10M Series
3 TFMOV20M Series
4 TFMOV25M Series

应用示例 Application Options

射频拉远单元（交流型） Remote Radio Unit (AC Type)

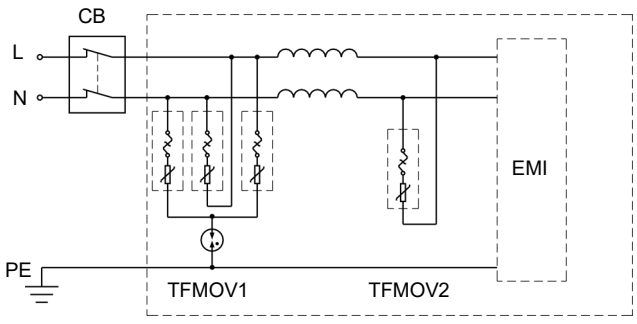

防雷插座 Power Strips (Surge Protector)

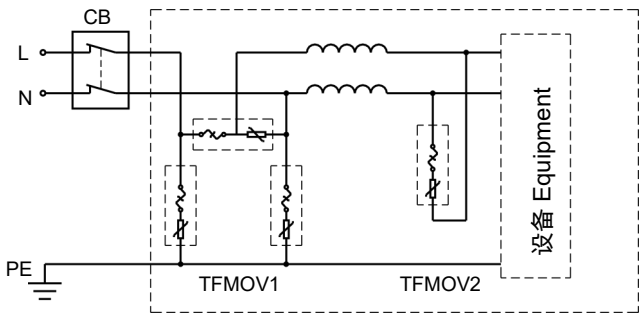

厦门赛尔特电子有限公司版权所有
All Rights Reserved by Xiamen SET Electronics Co., Ltd. 2021-2023 V3.1

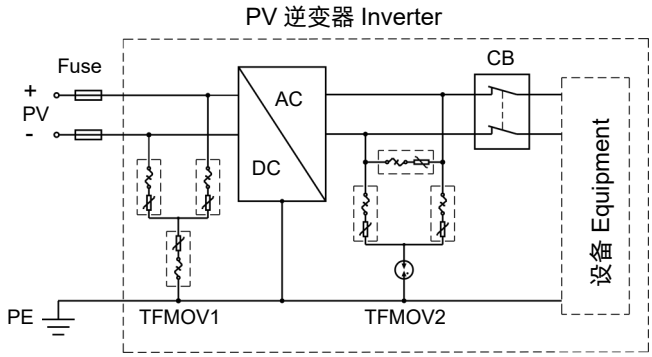

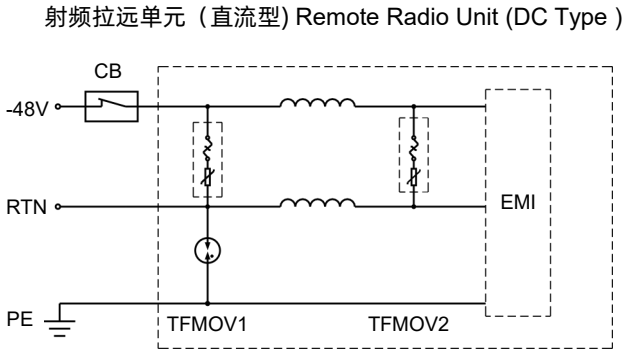

设计 Design

当单一器件的通流容量无法达到设计要求时，通常采用并联的方式满足需求，由于其非线性的电流-电压特性，并联使用过程中应注意以下事项：

1. 需要选用同一厂家，同一型号的压敏电阻进行并联；
2. 需要控制压敏电阻的压敏电压；通常，同一组中间的压敏电压偏差小于1%（最大与最小之间），同时满足下一条；
3. 按平均分配计算的通流容量并留有10%以上的裕量；
4. 设计时需要考虑回路中的浪涌电流均匀分布，如图2。

When a single TFMOV surge capacity can`t meet the requirement of customers, paralleling more TFMOVs is recommended. Due to its nonlinear current-voltage characteristics, please pay attention to below tips:

1. Use the TFMOV from the same manufacturer with same model to parallel.
2. Control the varistor voltage; Typically, the varistor voltage deviation should be less than 1% in the same group (between the Max and Min), and meet the next tip at the same time.
3. Calculate the average surge capacity for each TFMOV and keep a margin at least 10%.
4. Design the layout like Figure.2. to make sure the surge capacity is divided averagely.

错误的设计 The Design not Recommended

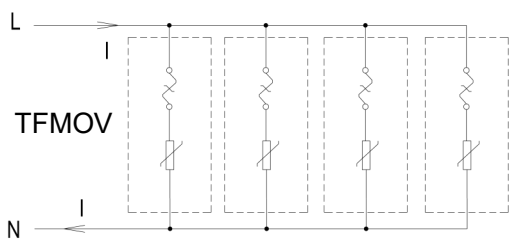

图 Figure.1

推荐的设计 The Design Recommended

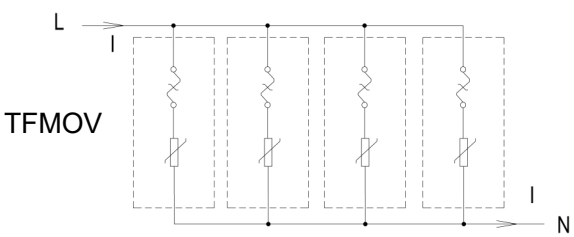

图 Figure.2

厦门赛尔特电子有限公司版权所有
All Rights Reserved by Xiamen SET Electronics Co., Ltd. 2021-2023 V3.1

认证信息 Agency Information

认证信息 Agency Information		标准 Standards	档案号 File NO.	类别 Category
	UL	UL 1449 4th Edition	E322662	VZCA2
	CUL	CSA C22.2 NO.8, CSA ECN 516	E322662	VZCA8
	TUV	EN 61643-11, EN 61643-31	详见具体型号 See the different models for details	
	CQC	GB 4943.1-2011, GB 8898-2011; GB/T 10193-1997, GB/T 10194-1997	详见具体型号 See the different models for details	
	CE	IEC/EN 61643-11, IEC/EN 61643-31	详见具体型号 See the different models for details	

专利 Patents

名称 Name	区域 Region	专利类别 Category	专利号 Patent NO.
设有合金型温度保险丝的压敏电阻 Varistor with In-built Alloy-Type Thermal Fuse	中国 China	发明专利 Patent for Invention	ZL 200510044661.5
一种具有过流过压过温保护功能的电源插座模块 A Protection Pluggable Module with Over Current、Over Voltage、and Over Temperature Protection Function	中国 China	实用新型 Utility Model	ZL 201020244488.X
一种带有双重保护功能的压敏电阻器 A Varistor with Double Protection Function	中国 China	实用新型 Utility Model	ZL 201020255481.8
防雷插座用的防雷模块 Surge Protection Module Applicable for Power Strip	中国 China	实用新型 Utility Model	ZL 201120107173.5
一种防雷插座用的防雷模块 A Surge Protection Module Applicable for Power Strip	中国 China	发明专利 Patent for Invention	ZL 201110092261.7
新型的热保护压敏电阻及浪涌保护器 A New Type of Varistor and Surge Protective Device with Thermal Protection	中国 China	实用新型 Utility Model	ZL 201420306127.1
一种浪涌保护器 A Surge Protective Device	中国 China	实用新型 Utility Model	ZL 201420415059.2
一种热保护压敏电阻及其组合元件 A Varistor and Thermal Protection Component Combination	中国 China	实用新型 Utility Model	ZL 201520376567.9
具合金型温度保险丝的压敏电阻 合金型温度ヒューズ付のバリスタ	日本 Japan	实用新型 Utility Model	3142835
设有合金型温度保险丝的压敏电阻 Varistor with an Alloy-Type Temperature Fuse	澳大利亚 Australia	实用新型 Utility Model	2007100456
具合金型溫度保險絲的壓敏電阻 Varistor with an Alloy-Type Temperature Fuse	台湾 Taiwan	实用新型 Utility Model	M 300855
设有合金型温度保险丝的压敏电阻 Varistor with an Alloy-type Temperature Fuse	加拿大 Canada	发明专利 Patent for Invention	2588819
设有合金型温度保险丝的压敏电阻 Metal Oxide Varistor with Built-in Alloy-Type Temperature Fuse	美国 USA	发明专利 Patent for Invention	US 8780521
设有合金型温度保险丝的压敏电阻-带外壳 Varistor with In-built Alloy Type Thermal Fuse (with Housing)	美国 USA	发明专利 Patent for Invention	US 9355763

TFMOV

厦门赛尔特电子有限公司版权所有
All Rights Reserved by Xiamen SET Electronics Co., Ltd. 2021-2023 V3.1

术语 Glossary

项目 Item	定义 Description
V_N	**标称压敏电压　Nominal Varistor Voltage** 在特定持续时间的脉冲电流下侧得压敏电阻两端的电压。 Voltage, at specified d.c. current used as a reference point in the component characteristic.
8/20 μs	**8/20 冲击电流　Current Impulse** 视在波前时间为8μs，半峰值时间为20μs的冲击电流。 Current impulse with a nominal virtual front time of 8 μs and a nominal time to half-value of 20 μs. — (IEC 61643-11)
1.2/50 μs	**1.2/50 冲击电压　Voltage Impulse** 视在波前时间为1.2μs，半峰值时间为50μs 的冲击电压。 Voltage impulse with a nominal virtual front time of 1.2 μs and a nominal time to half-value of 50 μs. — (IEC 61643-11)
U_c	**最大持续工作电压　Maximum Continuous Operating Voltage** 可连续地施加在SPD上的最大交流电压有效值。 Maximum r.m.s. voltage, which may be continuously applied to the SPD's mode of protection. — (IEC 61643-11)
I_n	**标称放电电流　Nominal Discharge Current** 流过SPD具有 8/20 波形电流的峰值 Crest value of the current through the SPD having a current waveshape of 8/20. — (IEC 61643-11)
I_{imp}	**I 类试验的冲击电流　Impulse Discharge Current for Class I Test** I_{imp}由三个参数来定义：电流峰值 I_{peak} 、电荷量 Q 和比能量 W/R Crest value of a discharge current through the SPD with specified charge transfer Q and specified energy W/R in the specified time. — (IEC 61643-11)
I_{max}	**最大放电电流　Maximum Discharge Current** 具有 8/20 波形和制造厂声称幅值的流过SPD电流的峰值。I_{max} 等于或大于 I_n 。 Crest value of a current through the SPD having an 8/20 waveshape and magnitude according to the manufacturers specification. I_{max} is equal to or greater than I_n. — (IEC 61643-11)
V_C	**钳位电压　Clamping Voltage** 在标准大气压环境下，压敏电阻中流过 8/20 等级电流脉冲时，压敏电阻两端呈现的电压峰值。 Peak voltage developed across the varistor terminations under standard atmospheric conditions, when passing an 8/20 class current pulse.
C_V	**电容量　Capacitance** 特定频率和电压下压敏电阻两端测得的电容量。 Capacitance across the MOV measured at a specified frequency and voltage.

TFMOV

厦门赛尔特电子有限公司版权所有
All Rights Reserved by Xiamen SET Electronics Co., Ltd. 2021-2023 V3.1

术语 Glossary

项目 Item	定义 Description
Modes of protection	**保护模式　Modes of protection** 在端子间包含保护元器件的电流路径，例如相对相、相对地、相对中线、中线对地。 An intended current path, between terminals that contains protective components, e.g. line-to-line, line-to-earth, line-to-neutral, neutral-to-earth. — (IEC 61643-11)
U_p	**电压保护水平　Voltage Protection Level** 由于施加规定陡度的冲击电压和规定幅值及波形的冲击电流而在SPD两端之间预期出现的最大电压 Maximum voltage to be expected at the SPD terminals due to an impulse stress with defined voltage steepness and an impulse stress with a discharge current with given amplitude and waveshape.
IP	**外壳防护等级　Degree of protection of enclosure** 外壳提供的防止触及危险的部件、防止外界的固体异物进入和/或防止水的进入壳内的防护程度。 Classification preceded by the symbol IP indicating the extent of protection provided by an enclosure against access to hazardous parts, against ingress of solid foreign objects and possibly harmful ingress of water — (IEC 61643-11)

TFMOV

厦门赛尔特电子有限公司版权所有
All Rights Reserved by Xiamen SET Electronics Co., Ltd. 2021-2023 V3.1

注意
ATTENTION

使用方法 Usage

1. 持续施加在热保护型压敏电阻上的电压不应超过其最大连续工作电压U_c。
   The voltage applied continuously to the TFMOV can not exceed its maximum continuous operating voltage U_c.
2. 气压在45 kPa 到106 kPa，对应海拔为+5000 m至- 500 m。
   When atmosphere press is from 45 kPa to 106 kPa, the related altitude shall be from +2000 m to -500 m.
3. 通电情况下请勿直接触碰本体或引脚，防止触电。
   Do not touch the product body or pins directly when power is on, to avoid electric shock.
4. 请不要用酮类、酯类、苯类、卤代烃等极性溶剂清洗本产品，以免破坏产品的封装层。
   Do not clean the TFMOV with strong polar solvent such as ketone, esters, benzene, halogenated hydrocarbon, to avoid damaging the encapsulating layer.
5. 应用本产品的设备必须有可靠的接地线与大地相连。
   It should have a reliable grounding when using these products.

更换 Replacement

基于安全原因，热保护型压敏电阻是不可修复的产品，替换时应使用同类别同型号的产品。
TFMOV is a non-repairable product. For safety sake, please use equivalent TFMOV for replacement.

存贮 Storage

热保护型压敏电阻的贮存应避免高温、高湿、日光直射和腐蚀性气体的场合，避免影响引脚可焊性，产品购入后请于1年内使用完。
Do not store TFMOV at high temperature, high humidity or corrosive gas environment. To avoid reducing the solderability of the pins, please use them up within 1 year after receiving the goods.

安装位置 Installation Position

勿将热保护型压敏电阻安装在可能经常出现剧烈振动的地方。
Do not install the TFMOV on a place that may often suffer severe continuous vibration.

厦门赛尔特电子有限公司版权所有
All Rights Reserved by Xiamen SET Electronics Co., Ltd. 2021-2023 V3.1

机械应力 Mechanical Stress

装配时应避免出现如敲击等作业方式，避免造成产品出现机械损伤。
Do not take violent action such as knocking when assembling to avoid mechanical damage.

波峰焊参数（参考）Wave Soldering Parameters (For Reference Only)

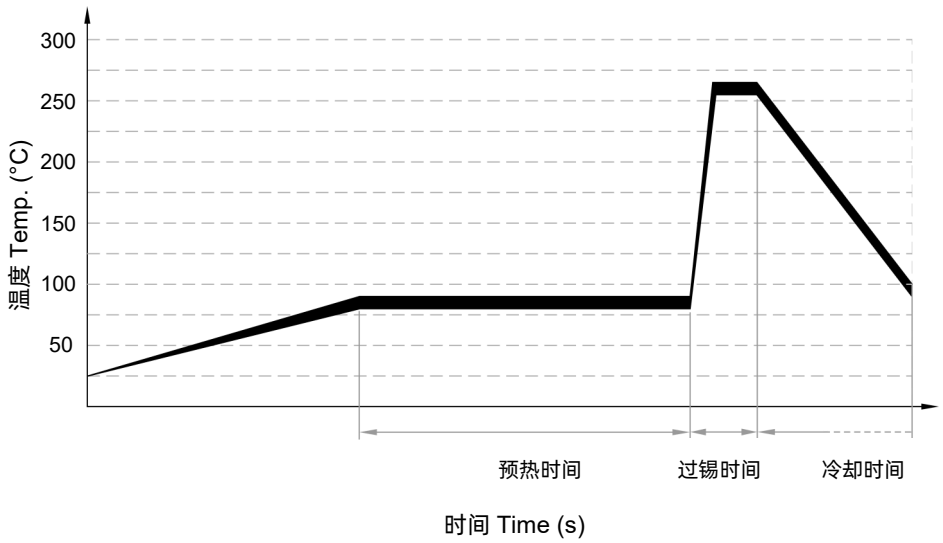

项目 Items	温度 Temp. (°C)	时间 Time (s)
预热 Preheating	80 to 90	60 to150
过锡 Dwelling	250 to 260	2 to 4

推荐的手工焊参数 Recommended Hand-Soldering Parameters

项目 Item	条件 Condition
烙铁头温度 Iron Temperature	350 °C (Max.)
焊接时间 Soldering Time	4 seconds (Max.)
焊接点距产品底部的距离 Distance between Soldering Point and the Bottom of Product	2 mm (Min.)

厦门赛尔特电子有限公司版权所有
All Rights Reserved by Xiamen SET Electronics Co., Ltd. 2021-2023 V3.1

热保护型压敏电阻 TFMOV
Thermally Protected Varistors

TFMOV10M 系列 Series

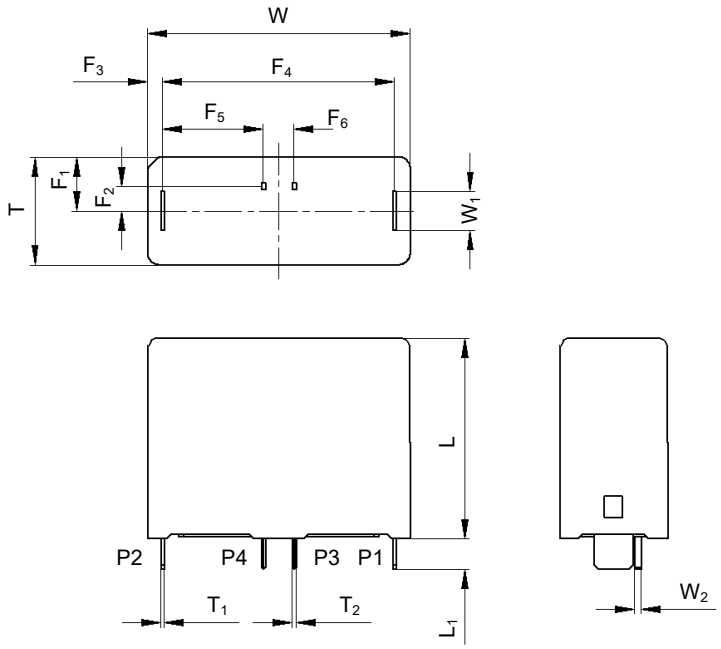

备注 Note: 单位 Unit: mm

TFMOV10M625, TFMOV10M680: 厚度 Thickness T is 16.0±1.0 mm

L	L_1	W	W_1	W_2	T	T_1
26.5±1.0	3.5±0.5	34.0±1.0	5.0±0.5	1.0±0.3	14.0±1.0	0.4±0.2
T_2	F_1	F_2	F_3	F_4	F_5	F_6
0.5±0.2	7.0±0.5	3.3±0.5	2.0±0.5	30.0±0.5	13.0±0.5	4.0±0.5

安规认证 Agency Approvals

机构 Agency	标准 Standards	档案号 No.
c UL us	UL1449	E322662
TÜVRheinland	EN 61643-11 EN 50539-11	J 50437564 R 50438698
CE	EN 61643-11 EN 61643-31	AN50473984 AN50473676
环境 Environment	RoHS 2.0 & REACH	符合 Compliant

电气原理图 Schematics

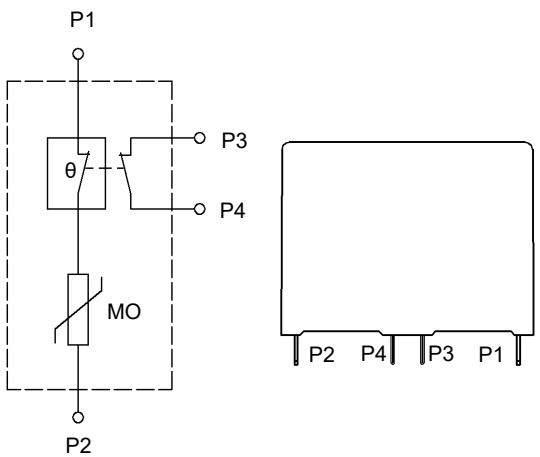

厦门赛尔特电子有限公司版权所有
All Rights Reserved by Xiamen SET Electronics Co., Ltd. 2021-2023 V3.1

技术参数Specifications

型号 Model	标称系统电压 Nominal System Voltage	标称压敏电压 Nominal Varistor Voltage @1mA	最大连续工作电压 Max. Continuous Operating Voltage		标称放电电流 Nominal Discharge Current (8/20 μs)	最大放电电流 Max. Discharge Current(8/20 μs)	电压保护水平 Voltage Protection Level	额定短路电流 SCCR	UL1449			IEC/EN 61643-11	IEC/EN 61643-31
	U_n	V_N	MCOV		I_n	I_{max}	U_p						
	(VAC)	(V)	U_c (VAC)	U_{cpv} (VDC)	(kA)	(kA)	(V)	(kA)	AC Type 1CA	AC Type 4CA	DC Type 4CA	Class II	Class II
TFMOV10M50	24	82	50	-	10	25	360	-		●		●	
TFMOV10M60	48	100	60	-	10	25	400	-		●		●	
TFMOV10M75	60	120	75	-	10	25	400	-		●		●	
TFMOV10M95	60	150	95	-	10	25	450	-		●		●	
TFMOV10M115	108	180	115	-	10	25	500	-		●		●	
TFMOV10M130	120	200	130	-	10	25	550	-		●		●	
TFMOV10M140	120	220	140	-	10	25	600	-		●		●	
TFMOV10M150	120	240	150	-	10	25	600	-		●		●	
TFMOV10M175	120	270	175	-	10	25	700	200	●	●		●	
TFMOV10M190	120	300	190	-	10	25	750	-		●		●	
TFMOV10M210	120	330	210	-	10	25	800	-		●		●	
TFMOV10M230	120	360	230	-	10	25	900	-		●		●	
TFMOV10M250	220	390	250	-	10	25	1000	-		●		●	
TFMOV10M275	230	430	275	-	10	25	1100	-		●		●	
TFMOV10M300	240	470	300	-	10	25	1200	200	●	●		●	
TFMOV10M320	277	510	320	-	10	25	1300	-		●		●	
TFMOV10M350	277	560	350	-	10	25	1500	200	●	●		●	
TFMOV10M385	277	620	385	500	10	25	1500	-		●	●	●	●
TFMOV10M420	347	680	420	560	10	25	1800	150	●	●	●	●	●
TFMOV10M460	347	750	460	600	10	25	1800	-		●	●	●	●
TFMOV10M510	347	820	510	670	10	25	1800	-		●	●	●	●
TFMOV10M550	480	910	550	720	10	25	2500	150	●	●	●	●	●
TFMOV10M625	480	1000	625	800	10	25	2500	-		●	●	●	●
TFMOV10M680	480	1100	680	880	10	25	2500	-		●	●	●	●

备注 Note:
电压保护水平 (U_p) 根据计算结果按 IEC 61643-11:2011 6.4条款优选值选定。
电压保护水平优选值(kV): 0.08, 0.09, 0.10, 0.12, 0.15, 0.22, 0.33, 0.4, 0.5, 0.6, 0.7, 0.8, 0.9, 1.0, 1.2, 1.5, 1.8, 2.0, 2.5, 3.0, 4.0, 5.0, 6.0, 8.0, 10.

The Value of Voltage Protection Level (U_p) is determined according to IEC 61643-11:2011 clause 6.4.
Preferred values of voltage protection level (kV): 0.08, 0.09, 0.10, 0.12, 0.15, 0.22, 0.33, 0.4, 0.5, 0.6, 0.7, 0.8, 0.9, 1.0, 1.2, 1.5, 1.8, 2.0, 2.5, 3.0, 4.0, 5.0, 6.0, 8.0, 10.

厦门赛尔特电子有限公司版权所有
All Rights Reserved by Xiamen SET Electronics Co., Ltd. 2021-2023 V3.1

性能曲线 Performance Curve

受限电流测试曲线 (UL 1449 4th 44.4章)
Limited Current Test Curve (UL 1449 4th clause 44.4)

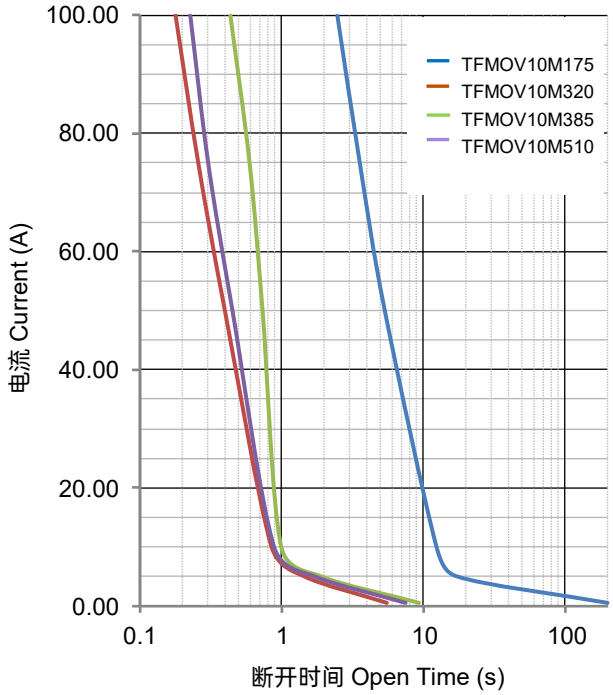

备注：受限电流测试曲线仅供参考
Note: The limited current test curve is for reference only.

冲击电流降额曲线
Max. Peak Current Derating Curve

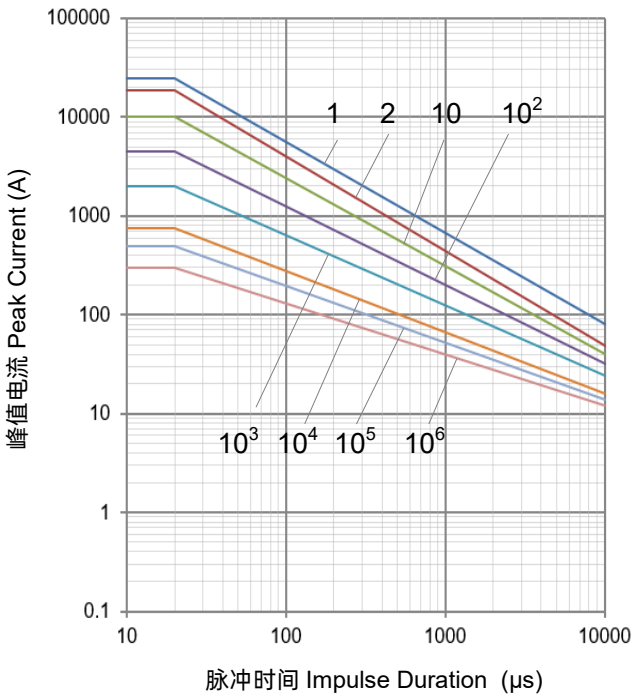

备注 Note:
1, 2, 10, 10^2, 10^3,10^4, 10^5, 10^6 代表重复次数 Stand for number of repetitions.

伏安特性曲线 Voltage-Current Characteristic Curves

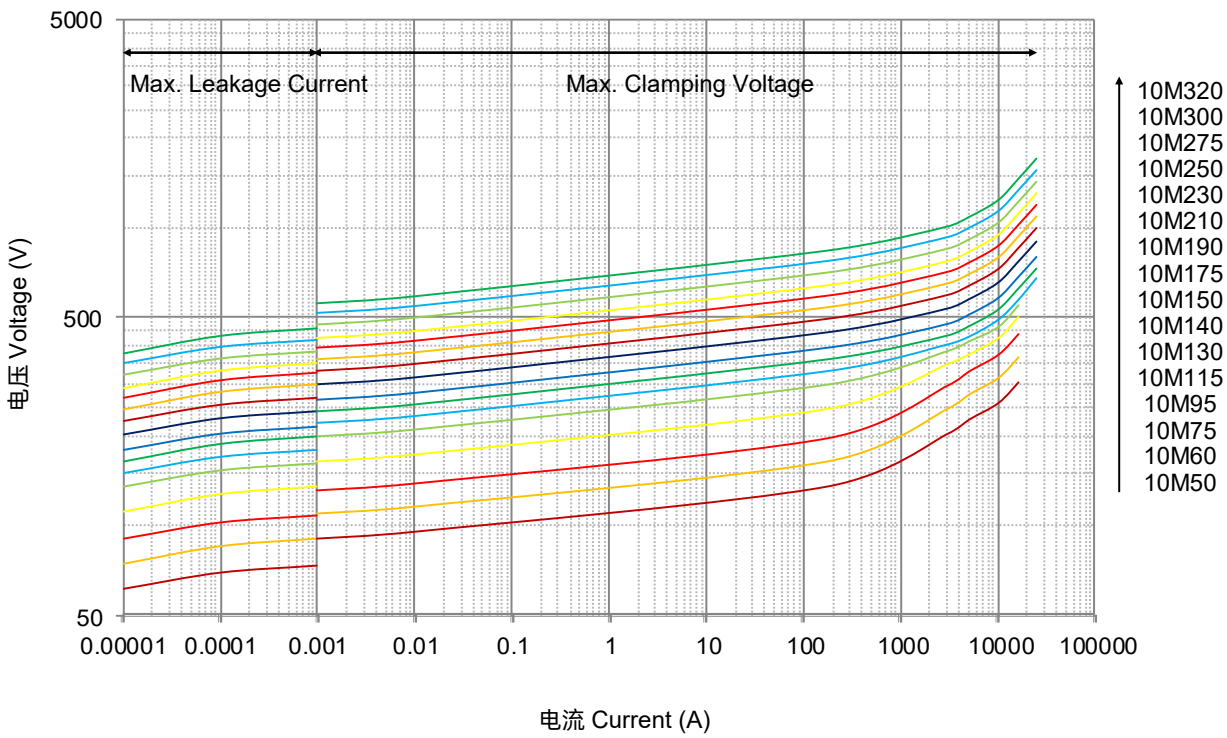

厦门赛尔特电子有限公司版权所有
All Rights Reserved by Xiamen SET Electronics Co., Ltd. 2021-2023 V3.1

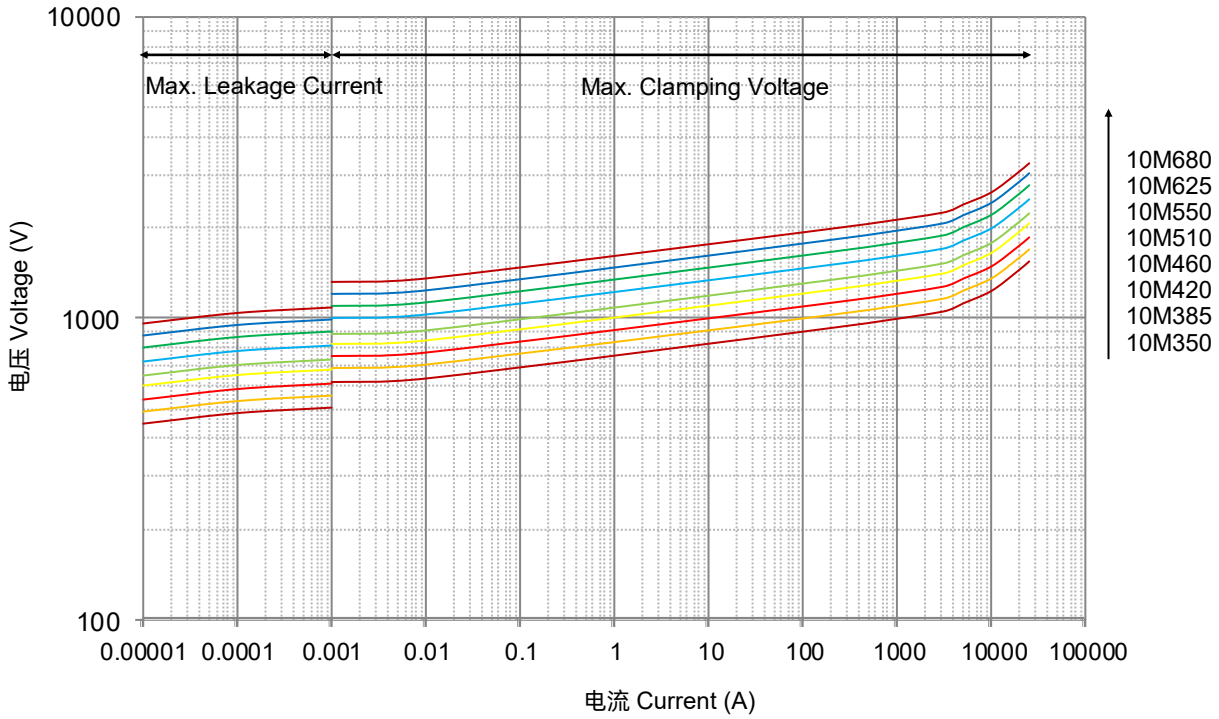

包装信息 Packaging Information

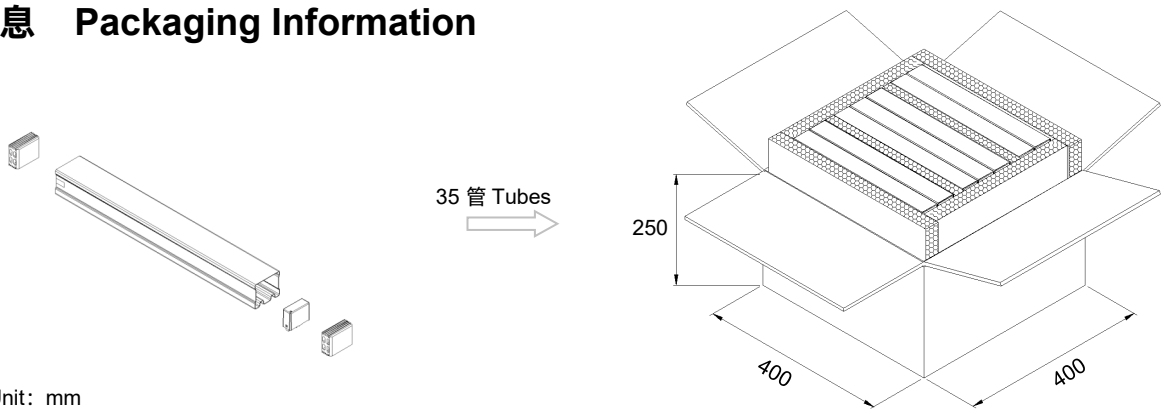

单位 Unit：mm
有特殊包装需求请联系我们
Please contact us if you have special packaging requirements.

项目 Item	管 Tube	箱 Carton
尺寸 Dimensions (mm)	40 × 34 × 314	400 × 400 × 250
数量 Quantity (PCS)	20	700

厦门赛尔特电子有限公司版权所有
All Rights Reserved by Xiamen SET Electronics Co., Ltd. 2021-2023 V3.1