压敏电阻
Metal Oxide Varistor (MOV)

SFV10D 系列 Series

简介 Description

金属氧化物压敏电阻（MOV）是以氧化锌（ZnO）为主要成分的非线性电阻元件，该元件浪涌电流耐量及非线性系数非常大，在阈值电压以下时，电阻非常高，几乎没有电流流过，如果超过该阈值电压，电阻急剧降低，可以泄放大电流；由于这种特性，作为电子、电气设备的保护元件，对异常电压的吸收，雷击浪涌的吸收等发挥着很大的作用。
赛尔特公司的压敏电阻具有高通流密度、低限制电压、良好的交流耐受能力，同时可以根据客户要求定制。

Metal Oxide Varistor (MOV) as one nonlinear resistance element is mainly made of zinc oxide (ZnO), which has very high surge capacity and big nonlinear coefficient. Below the threshold voltage, its resistance is very high, nearly no current flows through, but above the threshold voltage, the resistance reduces sharply, huge current can be discharged. Due to this characteristic, Varistor as a protection component in electronic and electrical equipment can absorb abnormal over-voltage and lightning surge.
SETsafe | SETfuse Varistor is with High Surge Current Density, Low Clamping Voltage, and Good Surge Capacity. It can also be customized as required.

MOV

产品结构 Product Structure

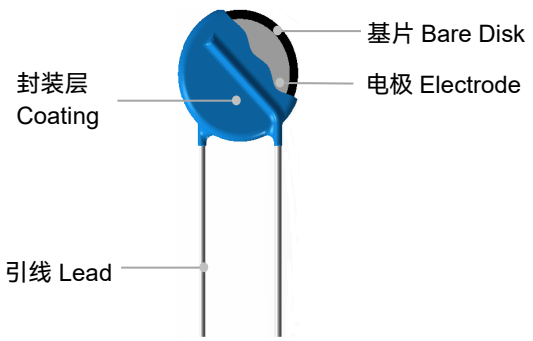

应用领域 Applications

- 电源 Power Supplies
- 家用电器 Home Electrical Appliances
- 工业设备 Industrial Devices
- 防雷插座 Surge Protectors
- 通信电源 Telecom Devices

安规信息 Agency Approvals

认证 Agency	标准 Standards	认证号 No.
	UL 1449 4th Edition	E322662
	CSA C22.2 NO.269.5-17	E322662
	EN 61051-1:2008 IEC 61051-1:2007 IEC 61051-2:1991+A1 IEC 61051-2-2:1991 Annex G.8.1 of IEC 62368-1:2018	J 50254627
	GB/T 10193-1997 GB/T 10194-1997 GB 4943.1-2011 GB 8898-2011	CQC12001084353

引线类型 Lead Types

引线类型 Lead Types		代码 Codes
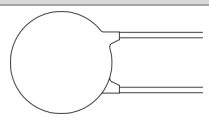	直型引线 Straight Lead	A
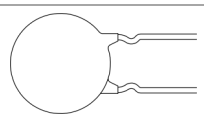	内弯型引线 Inward Crimp Lead	B
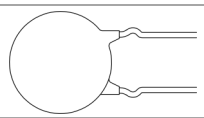	外弯型引线 Outward Crimp Lead	C
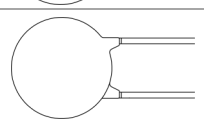	微直型引线 Little Straight Lead	I
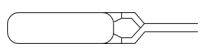	Y型引线 Inline Crimp Lead	D

厦门赛尔特电子有限公司版权所有
All Rights Reserved by Xiamen SET Electronics Co., Ltd. 2021-2023 V3.0

产品标识 Marking

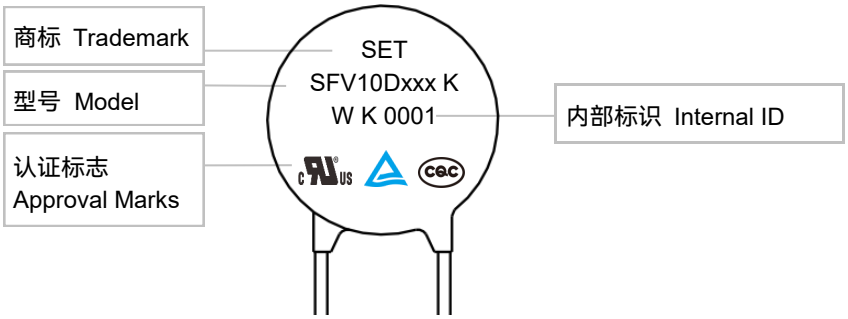

MOV

温度降额曲线 Temp. Derating Curve

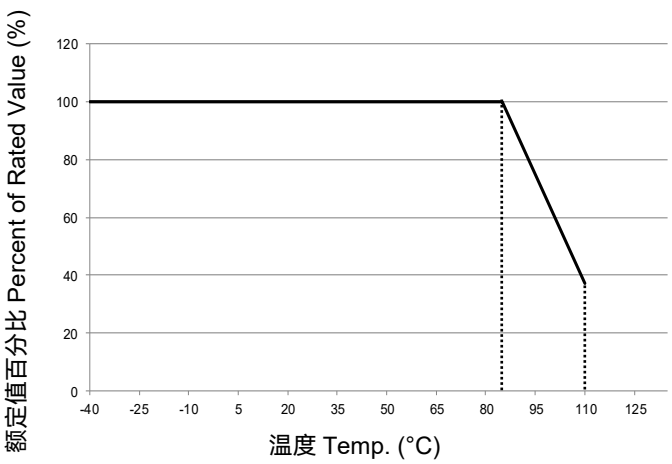

常温系列温度降额曲线

For Normal Temp. Series

备注：应用环境温度超过85 °C 时，峰值电流和能量额定值应按照上述曲线相应的降低。

Note: When ambient temp. exceeds 85 °C, the peak surge current and energy rating should be reduced as shown in left curve.

技术参数 General Technical Data

项目 Item	值 Value	单位 Unit
工作温度 Operating Temp.	-40 ~ +85	°C
存储温度 Storage Temp.	-40 ~ +125	°C
耐电压 Voltage Proof	≥2500	V_{ac}
绝缘电阻 Insulation Resistance	≥100	MΩ

厦门赛尔特电子有限公司版权所有
All Rights Reserved by Xiamen SET Electronics Co., Ltd. 2021-2023 V3.0

型号说明 Part Numbering System

SFV 10 D 471 - K T K A BUL - 001

流水号 Other Options

包装 & 引脚长度 Packaging & Lead Length

散装：散装+标准长度（L28）
BUL: Bulk + Standard Lead Length (Normal L28)

散装：散装+切脚至长度 3.5mm（范围：2.5mm-6mm）
C35: Bulk + Cut to 3.5 mm (Range:2.5 mm to 6 mm)

散装：散装+特殊脚长（范围：28mm-32mm）
L30: Bulk + Special Lead Length 30 mm
(Range:28 mm to32 mm)

编带+盒装（孔距12.7mm）
(0/1)AB:Taping + Box (Hole Pitch 12.7 mm)
编带+盒装（孔距15.0mm）
(0/1)EB: Taping + Box (Hole Pitch 15.0 mm)

编带+卷轴（孔距12.7mm）
(0/1)AR: Taping + Reel (Hole Pitch 12.7 mm)

编带+卷轴（孔距15mm）
(0/1)ER: Taping + Reel (Hole Pitch 15.0 mm)

备注：0/1表示产品的位置

Note:0/1 Means Product Position

0：代表两孔中间 In Middle of Two Holes

1：代表跨孔 Across the Hole

引脚类型 Lead Types

A: 直线型引线 Straight Lead
B: 内弯型引线 Inward Crimp Lead
C: 外弯型引线 Outward Crimp Lead
D: Y 型引线 Inline Crimp Lead
I: 微直线型引线 Little Straight Lead

*更多细节请参照包装信息
*For More Details Refer To Packaging Information.

厦门赛尔特电子有限公司版权所有
All Rights Reserved by Xiamen SET Electronics Co., Ltd. 2021-2023 V3.0

型号说明 Part Numbering System

SFV 10 D 471 - K T K A BUL - 001

浪涌等级 Surge Level

S: 通用型 Normal Type
K: 标准型 Standard Type
Q:耐冲击型 Advanced Type

工作温度 Operating Temp.

N: 环氧树脂包封	Epoxy Coating	85 °C
P: 环氧树脂包封	Epoxy Coating	105 °C
M:环氧树脂包封	Epoxy Coating	125 °C
T: 硅树脂包封	Silicone Coating	125 °C

电压公差 Voltage Tolerance

K : ±10%
J : ±5%
S : 特殊定制 Special Tolerance

标称压敏电压 Nominal Varistor Voltage

220: 22×10^0 = 22V
471: 47×10^1 = 470 V
122: 12×10^2 = 1200 V

形状 Disk Shape

D: 圆形 Round
S: 正方形 Square

基片尺寸 Bare Disk Dimension

圆形 D 10: 10 mm

产品类别 Product Category

压敏电阻
Setfuse Varistor

MOV

厦门赛尔特电子有限公司版权所有
All Rights Reserved by Xiamen SET Electronics Co., Ltd. 2021-2023 V3.0

术语 Glossary

项目 Item	描述 Description
V_N	**标准压敏电压 Nominal Varistor Voltage** 在规定持续时间的脉冲电流下测得MOV两端的电压。 Voltage, at specified D.C. current used as a reference point in the component characteristics.
I_L	**漏电流 Leakage Current** 在25℃或规定的其它温度下，施加最大直流电压时，通过压敏电阻器中的电流。 Current passing through the varistor at the max. d.c. voltage, and at a temp. of 25 °C, or any other specified temp.
UCT	**上限类别温度 Upper Category Temp.** 压敏电阻器设计所确定的能够连续工作的最高环境温度。 Max. ambient temp. for which a varistor has been designed to operate continuously.
LCT	**下限类别温度 Lower Category Temp.** 压敏电阻器设计所确定的能够连续工作的最低环境温度。 Minimum ambient temp. at which a varistor has been designed to operate continuously.
Max. Peak Current	**最大峰值电流 Max. Peak Current** 在环境温度25℃时，对于规定的脉冲次数而言，压敏电阻器中允许通过的每个脉冲的最大电流值。 Max. current per pulse, which may be passed by a varistor at an ambient temp. of 25 °C, for a given number of pulses.
V_C	**箝制电压 Clamping Voltage** 规定脉冲峰值电流及规定波形下测得MOV两端的电压峰值。 Peak voltage developed across the varistor terminations under standard atmospheric conditions, when passing an 8/20 μs class current pulse.
Voltage Proof	**耐电压 Voltage Proof** 连续可施加在压敏电阻器引出端和导电性安装之间的最大峰值电压。 Max. peak voltage, which may be applied under continuous operating conditions between the varistor terminations and any conducting mounting surface (Applicable only to insulated varistors).
C_V	**电容量 Capacitance** MOV两端之间的电容量，其测量应在规定的正弦频率和电压以及规定的温度下进行。除非另有规定，推荐采用25℃下,1 $V_{r.m.s}$,1 kHz的信号。 Capacitance across the MOV measured at a specified frequency and voltage.
V_{ac}	**最大连续交流电压 Max. Continuous a.c. Voltage** 在环境温度25℃时，可以施加在元件上连续工作的、波形基本是正弦波（总谐波畸变小于5%）的最大交流电压有效值。当温度高于25℃时，详细规范应给出降额曲线。 Max. a.c. r.m.s. voltage of a substantially sinusoidal waveform (less than 5% total harmonic distortion) which can be applied to the component under continuous operating conditions at 25 °C.
V_{dc}	**最大连续直流电压 Max. Continuous d.c. Voltage** 在环境温度25℃时，可以施加在元件上连续工作的最大直流电压（波纹小于5%）。当温度高于25℃时，详细规范应给出降额曲线。 Max. d.c. voltage (with less than 5% ripple) which can be applied to the component under continuous operating conditions at an ambient temp. of 25 °C.

MOV

厦门赛尔特电子有限公司版权所有
All Rights Reserved by Xiamen SET Electronics Co., Ltd. 2021-2023 V3.0

尺寸 Dimensions (mm)

型号 Model	L (Min.)	H (Max.)	T (Max.)	D (Max.)	d	F	F_1	A (Max.)
SFV10D220K	20	15.5	4.5	12.5	0.80±0.05	7.5±0.6	1.1 - 2.5	17.5
SFV10D270K	20	15.5	4.8	12.5	0.80±0.05	7.5±0.6	1.2 - 2.7	17.5
SFV10D330K	20	15.5	5.1	12.5	0.80±0.05	7.5±0.6	1.3 - 2.9	17.5
SFV10D390K	20	15.5	5.4	12.5	0.80±0.05	7.5±0.6	1.4 - 3.1	17.5
SFV10D470K	20	15.5	4.6	12.5	0.80±0.05	7.5±0.6	1.2 - 2.7	17.5
SFV10D560K	20	15.5	4.8	12.5	0.80±0.05	7.5±0.6	1.3 - 2.9	17.5
SFV10D680K	20	15.5	5.1	12.5	0.80±0.05	7.5±0.6	1.5 - 3.2	17.5
SFV10D820K	20	15.5	4.4	12.5	0.80±0.05	7.5±0.6	1.2 - 2.6	17.5
SFV10D101K	20	15.5	4.6	12.5	0.80±0.05	7.5±0.6	1.3 - 2.8	17.5
SFV10D121K	20	15.5	4.8	12.5	0.80±0.05	7.5±0.6	1.4 - 3.0	17.5
SFV10D151K	20	15.5	5.1	12.5	0.80±0.05	7.5±0.6	1.6 - 3.3	17.5
SFV10D181K	20	15.5	4.4	12.5	0.80±0.05	7.5±0.6	1.2 - 2.7	17.5
SFV10D201K	20	15.5	4.6	12.5	0.80±0.05	7.5±0.6	1.3 - 2.9	17.5
SFV10D221K	20	15.5	4.7	12.5	0.80±0.05	7.5±0.6	1.4 - 3.0	17.5
SFV10D241K	20	15.5	4.8	12.5	0.80±0.05	7.5±0.6	1.4 - 3.1	17.5
SFV10D271K	20	15.5	4.9	12.5	0.80±0.05	7.5±0.6	1.5 - 3.2	17.5
SFV10D301K	20	15.5	5.1	12.5	0.80±0.05	7.5±0.6	1.6 - 3.4	17.5
SFV10D331K	20	15.5	5.3	12.5	0.80±0.05	7.5±0.6	1.7 - 3.5	17.5
SFV10D361K	20	15.5	5.4	12.5	0.80±0.05	7.5±0.6	1.9 - 3.7	17.5
SFV10D391K	20	15.5	5.6	12.5	0.80±0.05	7.5±0.6	2.0 - 3.9	17.5
SFV10D431K	20	15.5	5.8	12.5	0.80±0.05	7.5±0.6	2.1 - 4.1	17.5
SFV10D471K	20	15.5	6.1	12.5	0.80±0.05	7.5±0.6	2.3 - 4.3	17.5
SFV10D511K	20	15.5	6.3	12.5	0.80±0.05	7.5±0.6	2.5 - 4.5	17.5
SFV10D561K	20	15.5	6.6	12.5	0.80±0.05	7.5±0.6	2.7 - 4.7	17.5
SFV10D621K	20	15.5	6.9	12.5	0.80±0.05	7.5±0.6	3.1 - 5.1	17.5
SFV10D681K	20	15.5	7.2	12.5	0.80±0.05	7.5±0.6	3.4 - 5.4	17.5
SFV10D751K	20	15.5	7.6	12.5	0.80±0.05	7.5±0.6	3.7 - 5.7	17.5
SFV10D821K	20	15.5	8.0	12.5	0.80±0.05	7.5±0.6	4.1 - 6.1	17.5
SFV10D911K	20	15.5	8.5	12.5	0.80±0.05	7.5±0.6	4.6 - 6.6	17.5
SFV10D102K	20	15.5	9.0	12.5	0.80±0.05	7.5±0.6	5.1 - 7.1	17.5
SFV10D112K	20	15.5	9.6	12.5	0.80±0.05	7.5±0.6	5.6 - 7.6	17.5
SFV10D122K	20	15.5	10.1	12.5	0.80±0.05	7.5±0.6	6.1 - 8.1	17.5

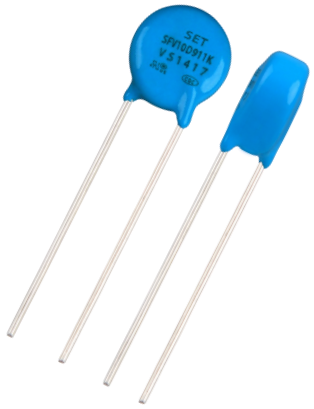

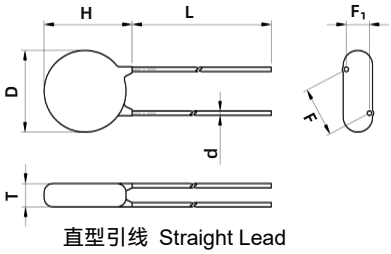

直型引线 Straight Lead

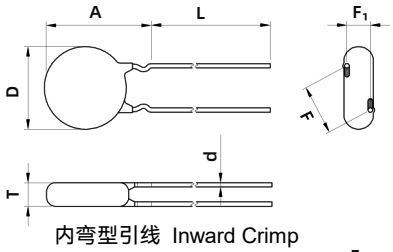

内弯型引线 Inward Crimp

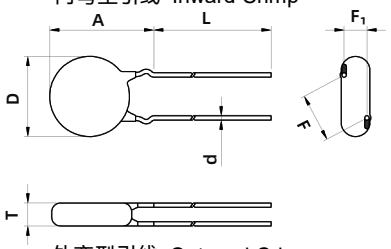

外弯型引线 Outward Crimp

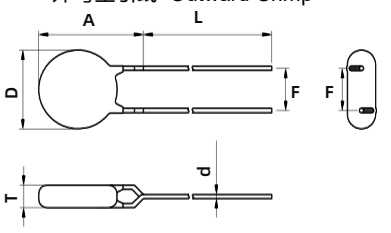

Y型引线 Inline Crimp

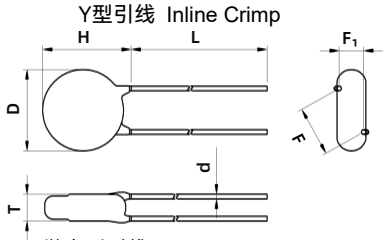

微直型引线 Little Straight Lead

备注：以上数据仅供参考
The above data is for reference only.

厦门赛尔特电子有限公司版权所有
All Rights Reserved by Xiamen SET Electronics Co., Ltd. 2021-2023 V3.0

技术参数 Specification

型号 Model	浪涌等级 Surge Level	最大连续工作电压 Max. Continuous Operating Voltage		压敏电压 Varistor Voltage @1 mA DC		箝制电压 Clamping Voltage (Max.)		最大峰值电流 Max. Peak Current (1 time, 8/20 μs)	最大能量 Max. Energy (10/1000 μs)	静态电容 Typical Capacitance (For reference only) @1 kHz	安规认证 Agency Approvals			
		Vac	Vdc	Min.	Max.	V_C	I_P	S		(pF)	UL	cUL	TUV	CQC
		(V)	(V)	(V)	(V)	(V)	(A)	(kA)	(J)					
SFV10D220K	S	14	18	20	24	43	5	0.5	2.5	4500	●	●	●	●
SFV10D270K	S	17	22	24	31	53	5	0.5	3.0	3700	●	●	●	●
SFV10D330K	S	20	26	30	36	65	5	0.5	4.0	3000	●	●	●	●
SFV10D390K	S	25	31	35	43	77	5	0.5	4.6	2400	●	●	●	●
SFV10D470K	S	30	38	42	52	93	5	0.5	5.5	2100	●	●	●	●
SFV10D560K	S	35	45	50	62	110	5	0.5	7.0	1800	●	●	●	●
SFV10D680K	S	40	56	61	75	135	5	0.5	8.2	1500	●	●	●	●
SFV10D820K	S	50	65	74	90	135	25	2.5	12	1200	●	●	●	●
SFV10D101K	S	60	85	90	110	165	25	2.5	15	1000	●	●	●	●
SFV10D121K	S	75	100	108	132	200	25	2.5	18	830	●	●	●	●
SFV10D151K	S	95	125	135	165	250	25	2.5	22	670	●	●	●	●
SFV10D181K	S	115	150	162	198	300	25	2.5	27	560	●	●	●	●
SFV10D201K	S	130	170	180	220	340	25	2.5	30	500	●	●	●	●
SFV10D221K	S	140	180	198	242	360	25	2.5	32	450	●	●	●	●
SFV10D241K	S	150	200	216	264	395	25	2.5	35	420	●	●	●	●
SFV10D271K	S	175	225	243	297	455	25	2.5	40	370	●	●	●	●
SFV10D301K	S	190	250	270	330	500	25	2.5	40	330	●	●	●	●
SFV10D331K	S	210	275	297	363	550	25	2.5	43	300	●	●	●	●
SFV10D361K	S	230	300	324	396	595	25	2.5	47	280	●	●	●	●
SFV10D391K	S	250	320	351	429	650	25	2.5	60	260	●	●	●	●
SFV10D431K	S	275	350	387	473	710	25	2.5	65	230	●	●	●	●
SFV10D471K	S	300	385	423	517	775	25	2.5	70	210	●	●	●	●
SFV10D511K	S	320	415	459	561	845	25	2.5	70	200	●	●	●	●
SFV10D561K	S	350	460	504	616	925	25	2.5	70	180	●	●	●	●
SFV10D621K	S	385	505	558	682	1025	25	2.5	70	160	●	●	●	●
SFV10D681K	S	420	560	612	748	1120	25	2.5	70	150	●	●	●	●
SFV10D751K	S	460	615	675	825	1240	25	2.5	75	130	●	●	○	●
SFV10D821K	S	510	670	738	902	1355	25	2.5	85	120	●	●	○	●
SFV10D911K	S	550	745	819	1001	1500	25	2.5	93	110	●	●	○	●
SFV10D102K	S	625	825	900	1100	1650	25	2.5	102	100	●	●	○	●
SFV10D112K	S	680	895	990	1210	1815	25	2.5	115	90	●	●	○	●
SFV10D122K	S	750	990	1080	1320	1980	25	2.5	125	55	●	●	○	●

备注 Note: ● 已认证 Approved ○ 无认证 Unauthorized

厦门赛尔特电子有限公司版权所有
All Rights Reserved by Xiamen SET Electronics Co., Ltd. 2021-2023 V3.0

技术参数 Specification

型号 Model	浪涌等级 Surge Level	最大连续工作电压 Max. Continuous Operating Voltage		压敏电压 Varistor Voltage @1 mA DC		箝制电压 Clamping Voltage (Max.)		最大峰值电流 Max. Peak Current (1 time, 8/20 μs)	最大能量 Max. Energy (10/1000 μs)	静态电容 Typical Capacitance (For reference only) @1 kHz	安规认证 Agency Approvals			
		Vac	Vdc	Min.	Max.	V_C	I_P	K		(pF)	UL	cUL	TUV	CQC
		(V)	(V)	(V)	(V)	(V)	(A)	(kA)	(J)					
SFV10D220K	K	14	18	20	24	43	5	1.0	3.2	4500	●	●	●	●
SFV10D270K	K	17	22	24	31	53	5	1.0	3.9	3700	●	●	●	●
SFV10D330K	K	20	26	30	36	65	5	1.0	4.8	3000	●	●	●	●
SFV10D390K	K	25	31	35	43	77	5	1.0	5.6	2400	●	●	●	●
SFV10D470K	K	30	38	42	52	93	5	1.0	6.8	2100	●	●	●	●
SFV10D560K	K	35	45	50	62	110	5	1.0	8.1	1800	●	●	●	●
SFV10D680K	K	40	56	61	75	135	5	1.0	9.8	1500	●	●	●	●
SFV10D820K	K	50	65	74	90	135	25	3.5	14	1200	●	●	●	●
SFV10D101K	K	60	85	90	110	165	25	3.5	17	1000	●	●	●	●
SFV10D121K	K	75	100	108	132	200	25	3.5	20	830	●	●	●	●
SFV10D151K	K	95	125	135	165	250	25	3.5	25	670	●	●	●	●
SFV10D181K	K	115	150	162	198	300	25	3.5	30	560	●	●	●	●
SFV10D201K	K	130	170	180	220	340	25	3.5	35	500	●	●	●	●
SFV10D221K	K	140	180	198	242	360	25	3.5	39	450	●	●	●	●
SFV10D241K	K	150	200	216	264	395	25	3.5	42	420	●	●	●	●
SFV10D271K	K	175	225	243	297	455	25	3.5	49	370	●	●	●	●
SFV10D301K	K	190	250	270	330	500	25	3.5	54	330	●	●	●	●
SFV10D331K	K	210	275	297	363	550	25	3.5	58	300	●	●	●	●
SFV10D361K	K	230	300	324	396	595	25	3.5	65	280	●	●	●	●
SFV10D391K	K	250	320	351	429	650	25	3.5	70	260	●	●	●	●
SFV10D431K	K	275	350	387	473	710	25	3.5	80	230	●	●	●	●
SFV10D471K	K	300	385	423	517	775	25	3.5	85	210	●	●	●	●
SFV10D511K	K	320	415	459	561	845	25	3.5	90	200	●	●	●	●
SFV10D561K	K	350	460	504	616	925	25	3.5	92	180	●	●	●	●
SFV10D621K	K	385	505	558	682	1025	25	3.5	95	160	●	●	●	●
SFV10D681K	K	420	560	612	748	1120	25	3.5	98	150	●	●	●	●
SFV10D751K	K	460	615	675	825	1240	25	3.5	100	130	●	●	○	●
SFV10D821K	K	510	670	738	902	1355	25	3.5	110	120	●	●	○	●
SFV10D911K	K	550	745	819	1001	1500	25	3.5	130	110	●	●	○	●
SFV10D102K	K	625	825	900	1100	1650	25	3.5	140	100	●	●	○	●
SFV10D112K	K	680	895	990	1210	1815	25	3.5	155	90	●	●	○	●
SFV10D122K	K	750	990	1080	1320	1980	25	3.5	170	55	●	●	○	●

备注 Note：● 已认证 Approved ○ 无认证 Unauthorized

厦门赛尔特电子有限公司版权所有
All Rights Reserved by Xiamen SET Electronics Co., Ltd. 2021-2023 V3.0

技术参数 Specification

型号 Model	浪涌等级 Surge Level	最大连续工作电压 Max. Continuous Operating Voltage		压敏电压 Varistor Voltage @1 mA DC		箝制电压 Clamping Voltage (Max.)		脉冲性能 Pulse Impact Performance (40 times) (1.2/50 μs & 8/20 μs)	最大能量 Max. Energy (10/1000 μs)	静态电容 Typical Capacitance (For reference only) @1 kHz	安规认证 Agency Approvals			
		Vac	Vdc	Min.	Max.	V_C	I_P	Q		(pF)	UL	CUL	TUV	CQC
		(V)	(V)	(V)	(V)	(V)	(A)	(kV)	(J)					
SFV10D201K	Q	130	170	180	220	340	25	4.5	35	500	●	●	●	●
SFV10D221K	Q	140	180	198	242	360	25	4.5	39	450	●	●	●	●
SFV10D241K	Q	150	200	216	264	395	25	4.5	42	420	●	●	●	●
SFV10D271K	Q	175	225	243	297	455	25	4.5	49	370	●	●	●	●
SFV10D301K	Q	190	250	270	330	500	25	4.5	54	330	●	●	●	●
SFV10D331K	Q	210	275	297	363	550	25	4.5	58	300	●	●	●	●
SFV10D361K	Q	230	300	324	396	595	25	4.5	65	280	●	●	●	●
SFV10D391K	Q	250	320	351	429	650	25	4.5	70	260	●	●	●	●
SFV10D431K	Q	275	350	387	473	710	25	4.5	80	230	●	●	●	●
SFV10D471K	Q	300	385	423	517	775	25	4.5	85	210	●	●	●	●
SFV10D511K	Q	320	415	459	561	845	25	4.5	90	200	●	●	●	●
SFV10D561K	Q	350	460	504	616	925	25	4.5	92	180	●	●	●	●
SFV10D621K	Q	385	505	558	682	1025	25	4.5	95	160	●	●	●	●
SFV10D681K	Q	420	560	612	748	1120	25	4.5	98	150	●	●	●	●

备注 Note：● 已认证 Approved ○ 无认证 Unauthorized

厦门赛尔特电子有限公司版权所有
All Rights Reserved by Xiamen SET Electronics Co., Ltd. 2021-2023 V3.0

性能曲线（仅供参考） Performance Curve (For reference only)

- 最大峰值电流降额曲线 Max. Peak Current Derating Curves

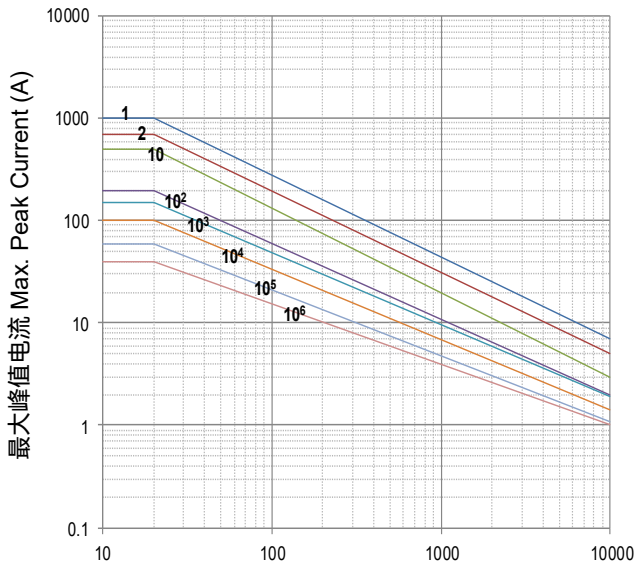

脉冲持续时间 Impulse Duration (μs)

SFV10D220K to SFV10D680K

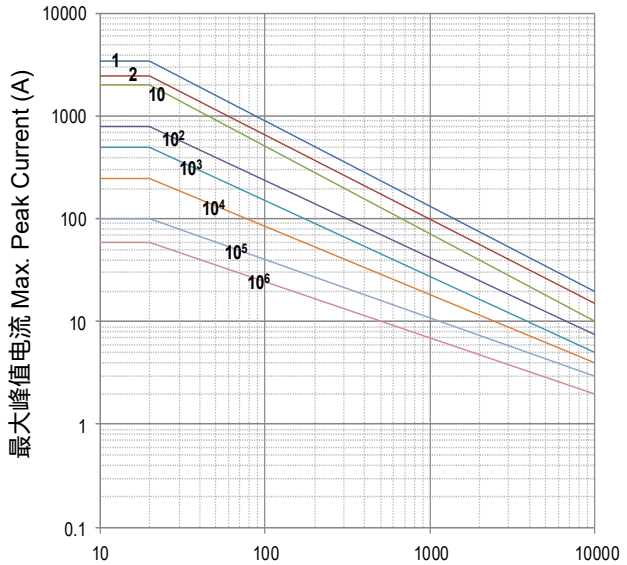

脉冲持续时间 Impulse Duration (μs)

SFV10D820K to SFV10D122K

备注 Note: 1,2,10,10^2,10^3,10^4,10^5,10^6 表示重复冲击次数 Stand for Repetitions.

- 伏安特性曲线 Voltage-Current Characteristic Curves

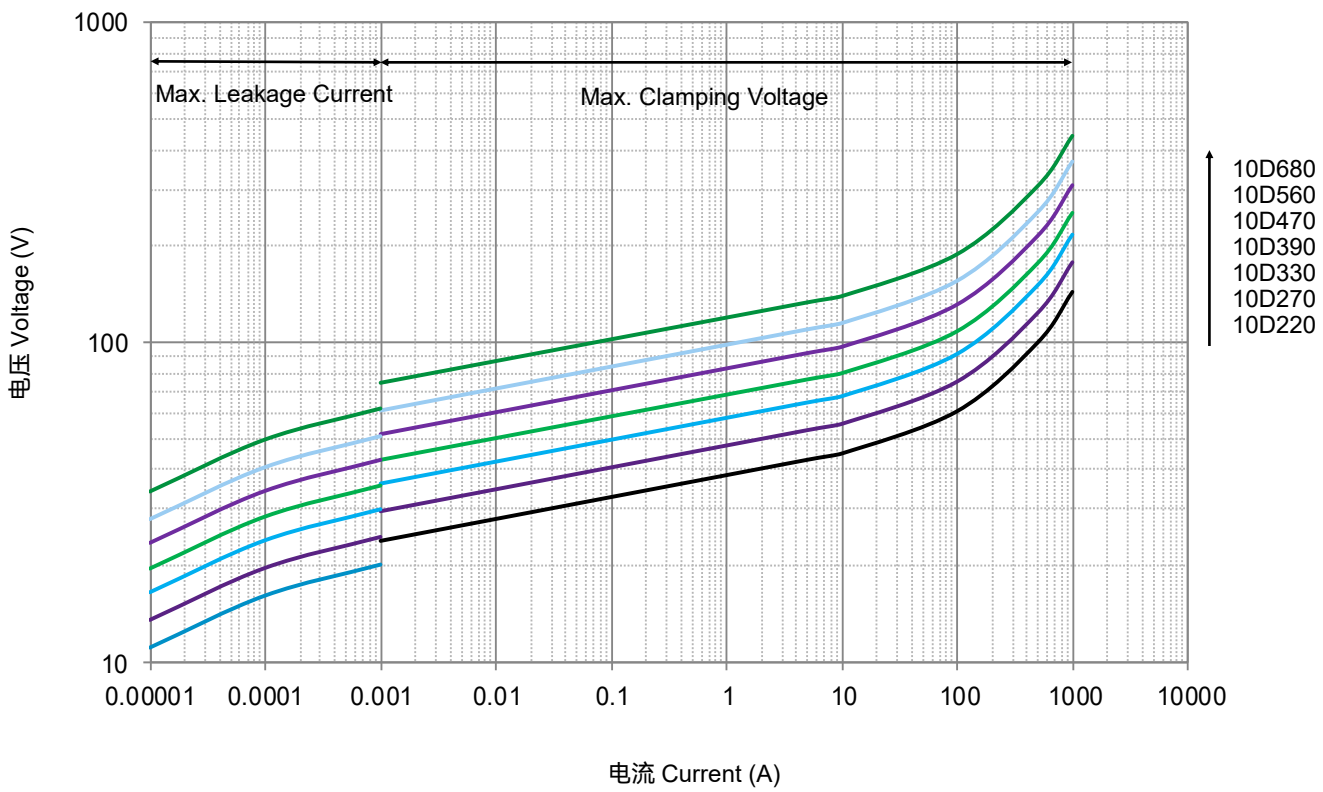

厦门赛尔特电子有限公司版权所有
All Rights Reserved by Xiamen SET Electronics Co., Ltd. 2021-2023 V3.0

- 伏安特性曲线 Voltage-Current Characteristic Curves

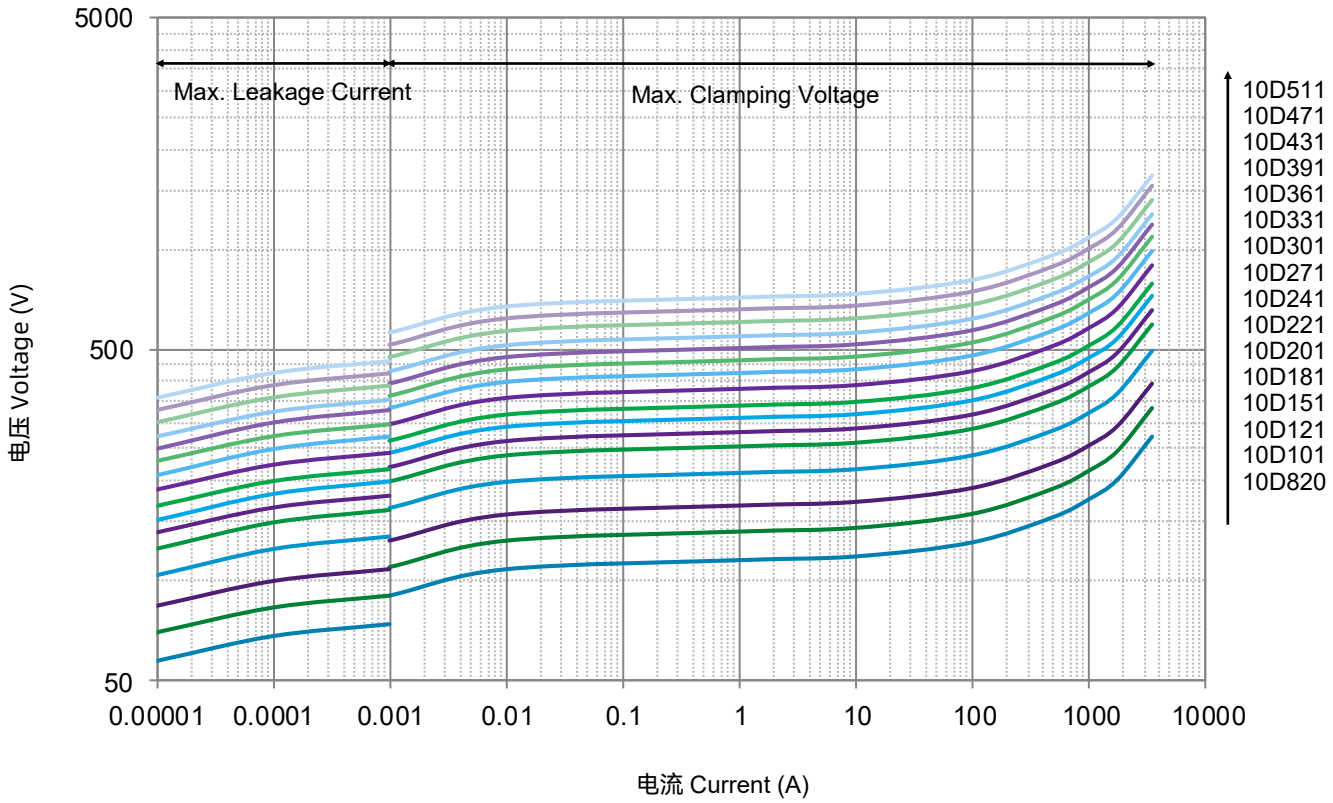

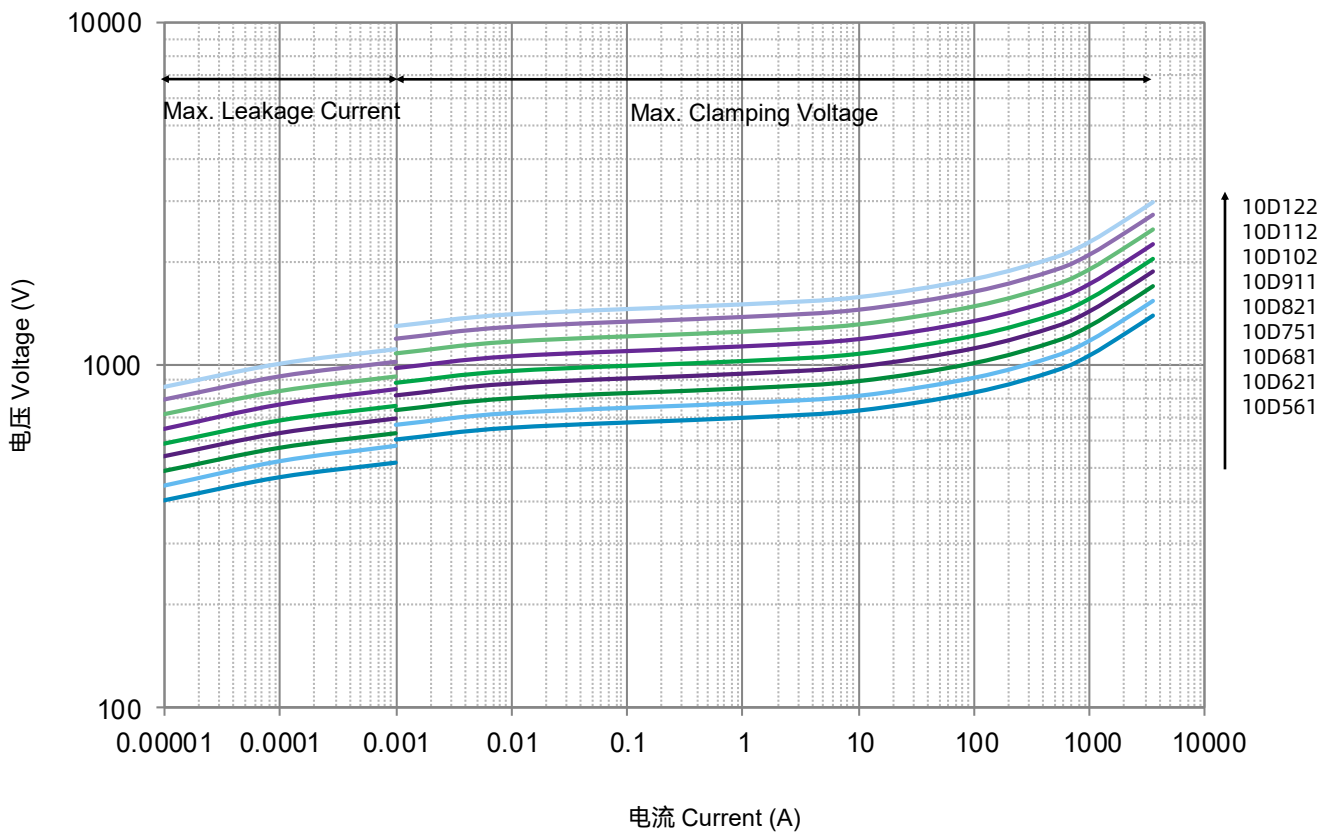

MOV

+86 592-571-5838 www.SETsafe.com www.SETfuse.com E-mail : sales@SETfuse.com
厦门赛尔特电子有限公司版权所有
All Rights Reserved by Xiamen SET Electronics Co., Ltd. 2021-2023 V3.0

焊接参数 Soldering Parameters

波峰焊参数 Wave Soldering Parameters

本波峰焊参数仅供参考，实际使用时应做相关的试验进行验证 。
The wave soldering parameters are for reference only. When MOV is for practice use, some related validation is recommended.

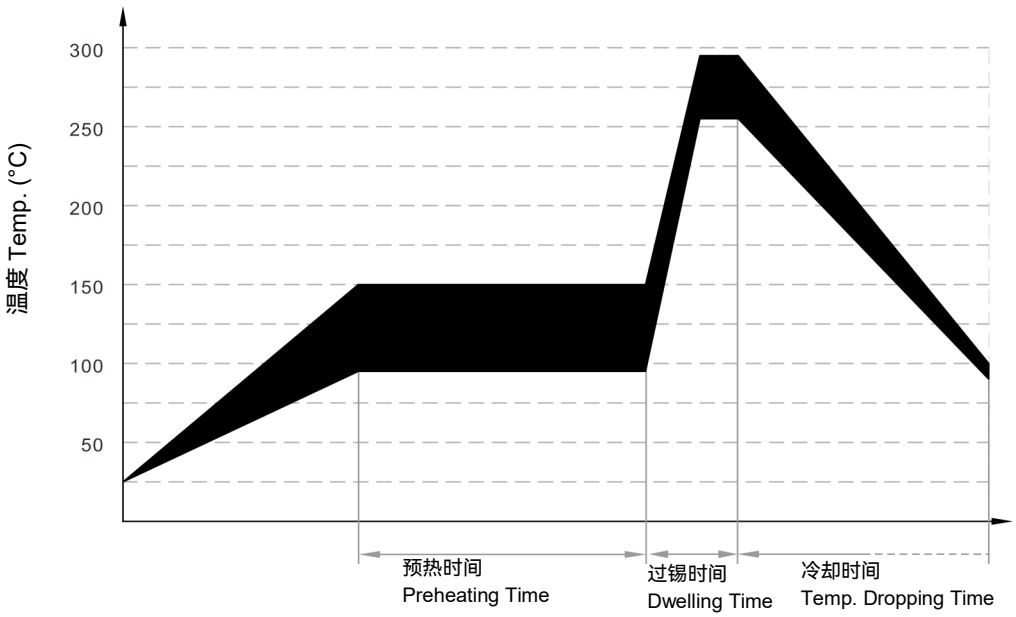

波峰焊曲线 Wave Soldering Curve

项目 Item	温度 Temp. (°C)	时间 Time (s)
预热 Preheating	90 ~ 150	<150
过锡 Dwelling	255 ~ 290	3 ~ 10

手工焊参数 Hand-Soldering Parameters

项目 Item	条件 Condition
烙铁头部温度 Temp. of Solder Head	350 °C (max.)
焊接时间 Soldering Time	4 s (max.)

厦门赛尔特电子有限公司版权所有
All Rights Reserved by Xiamen SET Electronics Co., Ltd. 2021-2023 V3.0

包装 Packaging Information

- 散装包装 Bulk Packaging (Code: BUL)
- 散装包装数量和重量 Bulk Packaging Quantity & Weight.

系列 Series	标称压敏电压 Nominal Varistor Voltage	PE袋 PE Bag	数量/盒 Box	数量/箱 Carton	毛重/箱 (365 × 265 × 245) G. W. / Carton
10D	(V)	(PCS)	(PCS)	(PCS)	(kg)±10%
	220 ~ 471	500	1000	6000	5 ~ 13
	511 ~ 821	400	800	4800	13 ~ 17

备注 : 其他引脚长度的包装请咨询赛尔特。
Note: Other lead length packaging information, please contact SETsafe | SETfuse.

单位 Dimensions (mm)

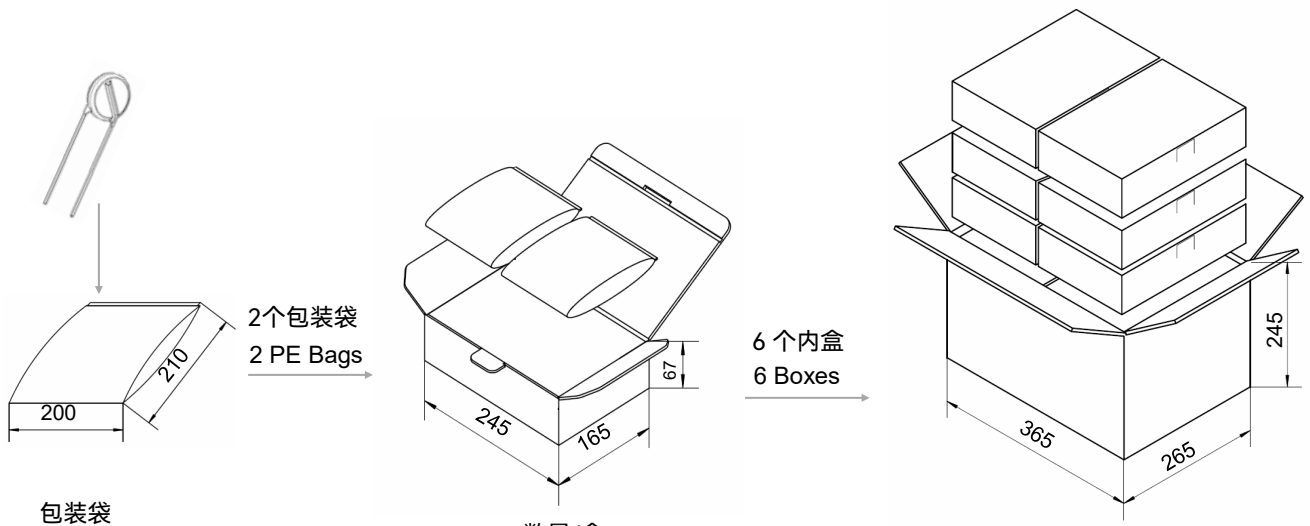

包装袋
PE Bag

数量/盒
Box

纸箱
Carton

厦门赛尔特电子有限公司版权所有
All Rights Reserved by Xiamen SET Electronics Co., Ltd. 2021-2023 V3.0

包装 Packaging Information

- 编带包装 Tape Packaging (Code: 0AB)

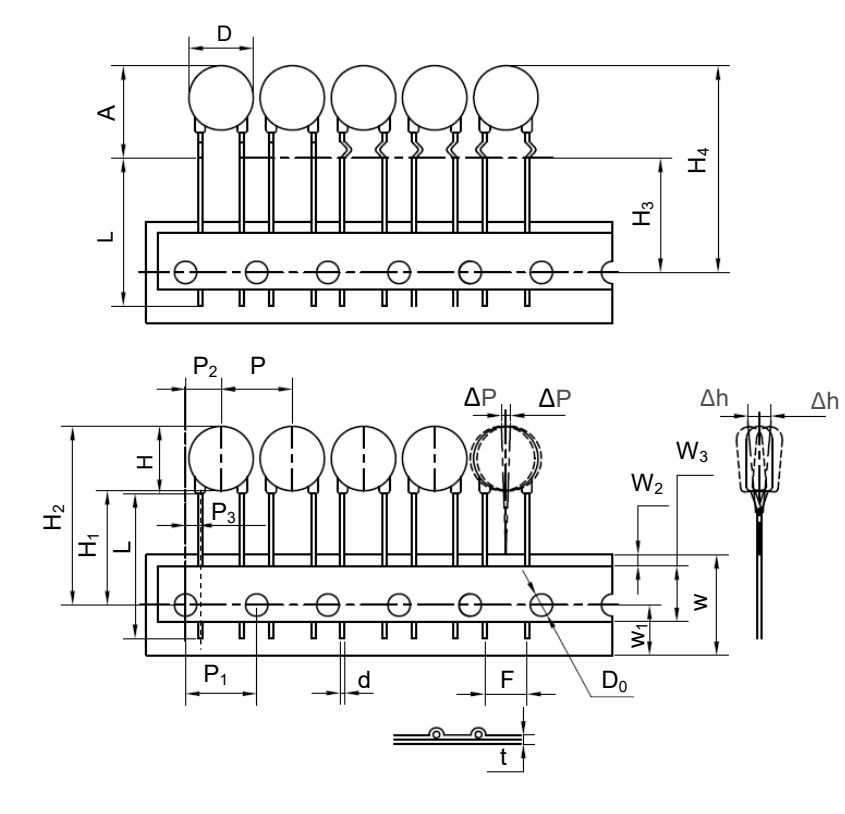

尺寸 Dimensions (mm)	
Symbol	**Dimensions**
P	12.7±1.0
P_1	12.7±0.3
P_2	6.35±1.30
P_3	2.6±0.7
ΔP(max.)	1.0
W	18.0±1.0
W_1	9.0±1.0
W_2(max.)	3.0
W_3	10.0±2.0
H(max.)	15.5
H_1	$18.0^{+2.0}_{-0}$
H_2(max.)	36.0
H_3	$18.0^{+2.0}_{-0}$
H_4(max.)	38.0
Δh(max.)	2.0
t (max.)	0.6
D(max.)	12.5
D_0	4.0±0.2
d	0.80±0.05
A(max.)	17.5
F	7.5±1.0
L(min.)	Taping

- 编带包装数量和重量 Tape Packaging Quantity & Weight.

型号 Series	标称压敏电压 Nominal Varistor Voltage	数量/盒 Box	数量/箱 Carton	毛重/箱 (365 × 265 × 415) G.W. / Carton
	(V)	(PCS)	(PCS)	(kg)±10%
10D	112 - 122	550	3850	12 - 13
	911 - 102	600	4200	11 - 13
	751 - 821	700	4900	11 - 13
	471 - 681	800	5600	9 - 13
	391 - 431	1000	7000	10 - 11
	331 - 361	1100	7700	10 - 11
	680			
	271 - 301	1200	8400	10 - 11
	151			
	560			
	180 - 241	1300	9100	9 - 11
	820 - 121			8 - 10
	220 - 470			7 - 11

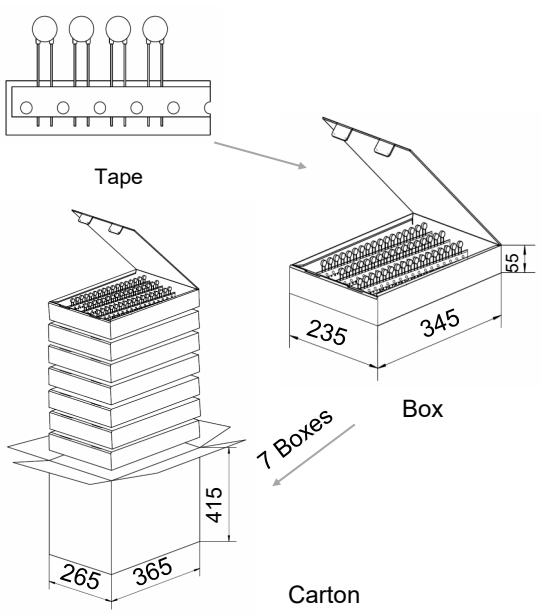

厦门赛尔特电子有限公司版权所有
All Rights Reserved by Xiamen SET Electronics Co., Ltd. 2021-2023 V3.0

包装 Packaging Information

- 编带包装 Tape Packaging (Code: 1AB)

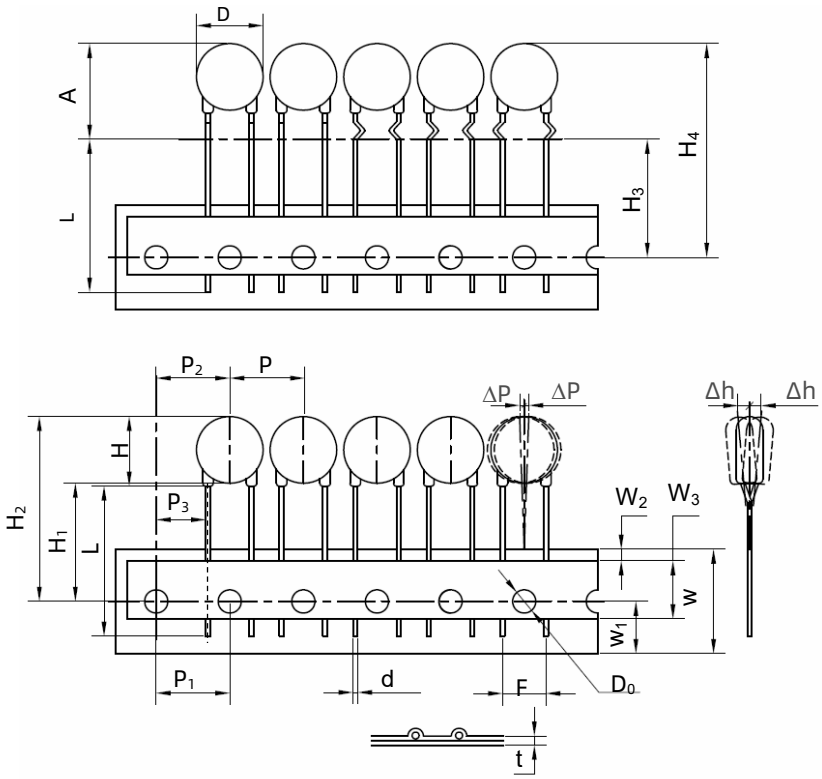

尺寸 Dimensions (mm)	
Symbol	**Dimensions**
P	12.7±1.0
P_1	12.7±0.3
P_2	12.7±1.30
P_3	8.95±0.7
ΔP(max.)	1.0
W	18.0±1.0
W_1	9.0±1.0
W_2(max.)	3.0
W_3	10.0±2.0
H(max.)	15.5
H_1	$18.0^{+2.0}_{-0}$
H_2(max.)	36.0
H_3	$18.0^{+2.0}_{-0}$
H_4(max.)	38.0
Δh(max.)	2.0
t (max.)	0.6
D(max.)	12.5
D_0	4.0±0.2
d	0.80±0.05
A(max.)	17.5
F	7.5±1.0
L(min.)	Taping

- 编带包装数量和重量 Tape Packaging Quantity & Weight.

型号 Series	标称压敏电压 Nominal Varistor Voltage	数量/盒 Box	数量/箱 Carton	毛重/箱 (365 × 265 × 415) G.W. / Carton
	(V)	(PCS)	(PCS)	(kg)±10%
10D	112 - 122	550	3850	12 - 13
	911 - 102	600	4200	11 - 13
	751 - 821	700	4900	11 - 13
	471 - 681	800	5600	9 - 13
	391 - 431	1000	7000	10 - 11
	331 - 361	1100	7700	10 - 11
	680			
	271 - 301	1200	8400	10 - 11
	151			
	560			
	180 - 241	1300	9100	9 - 11
	820 - 121			8 - 10
	220 - 470			7 - 11

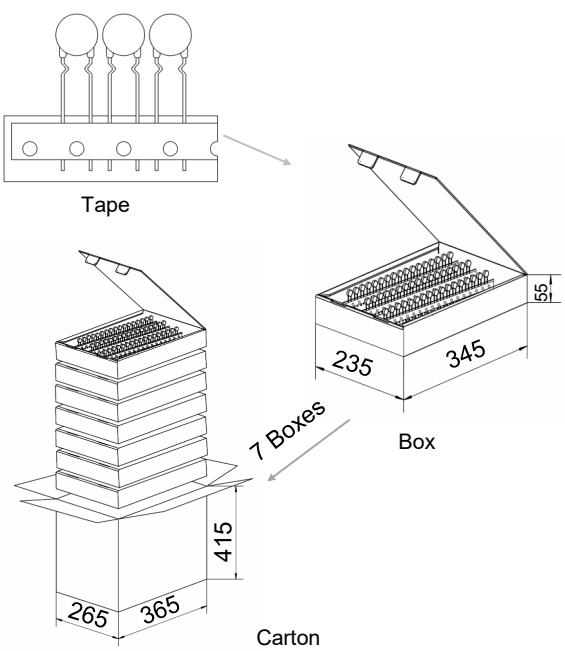

厦门赛尔特电子有限公司版权所有
All Rights Reserved by Xiamen SET Electronics Co., Ltd. 2021-2023 V3.0

包装 Packaging Information

- 编带包装 Tape Packaging (Code: 0EB)

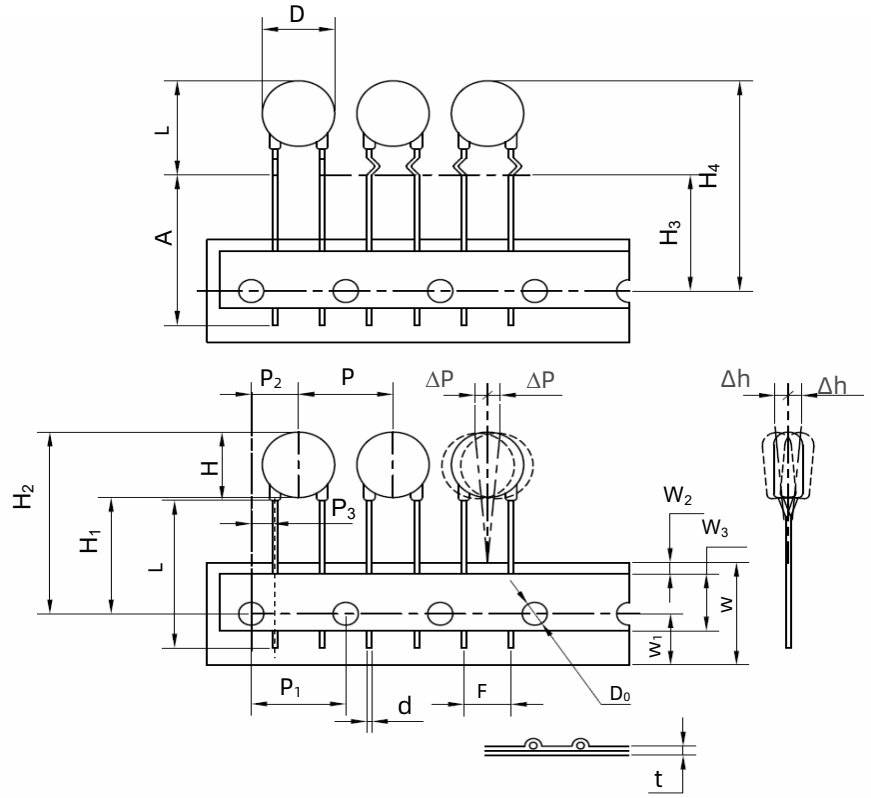

尺寸 Dimensions (mm)	
Symbol	**Dimensions**
P	15.0±1.0
P_1	15.0±0.3
P_2	7.5±1.3
P_3	3.75±1.0
ΔP(max.)	1.0
W	18.0±1.0
W_1	9.0±1.0
W_2(max.)	3.0
W_3	10.0±2.0
H(max.)	15.5
H_1	$18.0^{+2.0}_{-0}$
H_2(max.)	36.0
H_3	$18.0^{+2.0}_{-0}$
H_4(max.)	38.0
Δh(max.)	2.0
t (max.)	0.6
D(max.)	12.5
D_0	4.0±0.2
d	0.80±0.05
A(max.)	17.5
F	7.5±1.0
L(min.)	Taping

- 编带包装数量和重量 Tape Packaging Quantity & Weight.

型号 Series	标称压敏电压 Nominal Varistor Voltage	数量/盒 Box	数量/箱 Carton	毛重/箱 (365 × 265 × 415) G.W. / Carton
	(V)	(PCS)	(PCS)	(kg)±10%
10D	911 - 122	500	3500	9 - 12
	751 - 821	600	4200	10 - 11
	621 - 681	700	4900	10 - 11
	431 - 561	800	5600	8 - 11
	271 - 391	1000	7000	8 - 10
	151			9
	560 - 680			9 - 10
	201 - 241	1100	7700	8 - 9
	121			
	390-470			
	181	1200	8400	7 - 8
	820 - 101			
	330			
	220-270	1300	9100	7 - 8

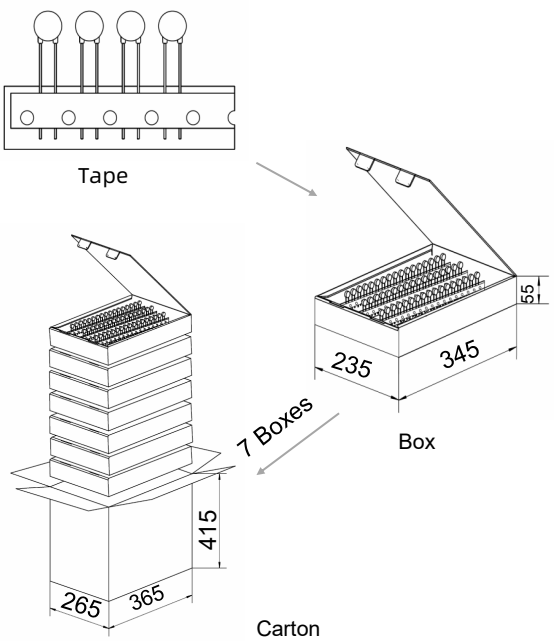

厦门赛尔特电子有限公司版权所有
All Rights Reserved by Xiamen SET Electronics Co., Ltd. 2021-2023 V3.0

包装 Packaging Information

- 卷轴包装 Reel Packaging (Code:0AR)

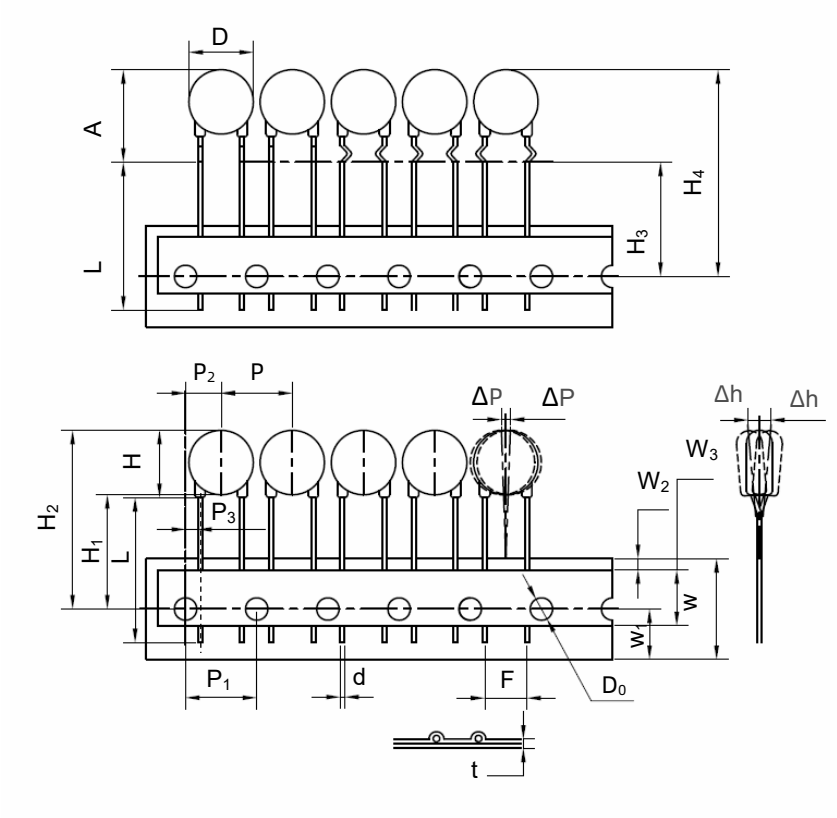

尺寸 Dimensions (mm)	
Symbol	**Dimensions**
P	12.7±1.0
P_1	12.7±0.3
P_2	6.35±1.30
P_3	2.6±0.7
ΔP(max.)	1.0
W	18.0±1.0
W_1	9.0±1.0
W_2(max.)	3.0
W_3	10.0±2.0
H(max.)	15.5
H_1	$18.0^{+2.0}_{-0}$
H_2(max.)	36.0
H_3	$18.0^{+2.0}_{-0}$
H_4(max.)	38.0
Δh(max.)	2.0
t (max.)	0.6
D(max.)	12.5
D_0	4.0±0.2
d	0.80±0.05
A(max.)	17.5
F	7.5±1.0
L(min.)	Taping

- 卷轴包装数量和重量 Reel Packaging Quantity & Weight.

型号 Series	标称压敏电压 Nominal Varistor Voltage	数量/盒 Box	数量/箱 Carton	毛重/箱 (375 × 335 × 385) G.W. / Carton
	(V)	(PCS)	(PCS)	(kg)±10%
10D	220 - 391	1500	7500	6 - 11
	431 - 561	1000	5000	8 - 10
	621 - 821	800	4000	8 - 11
	911 - 122	500	2500	7 - 9

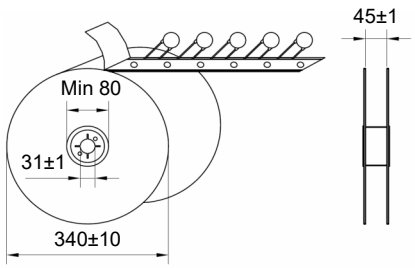

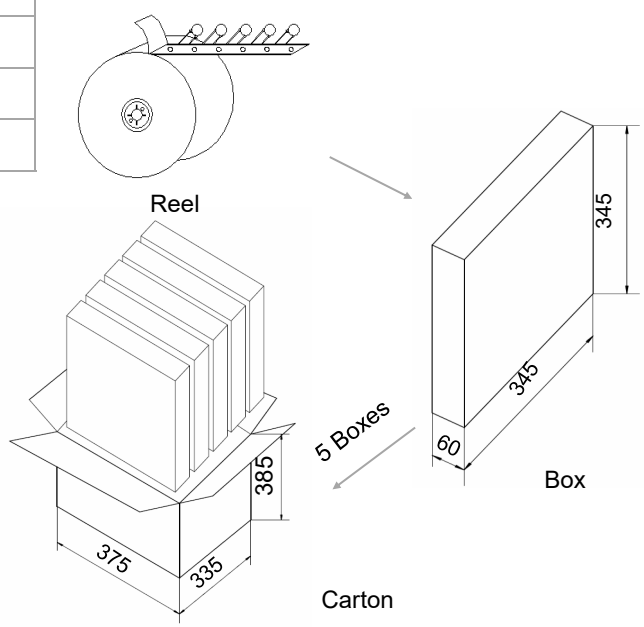

厦门赛尔特电子有限公司版权所有
All Rights Reserved by Xiamen SET Electronics Co., Ltd. 2021-2023 V3.0

包装 Packaging Information

- 卷轴包装 Reel Packaging (Code:1AR)

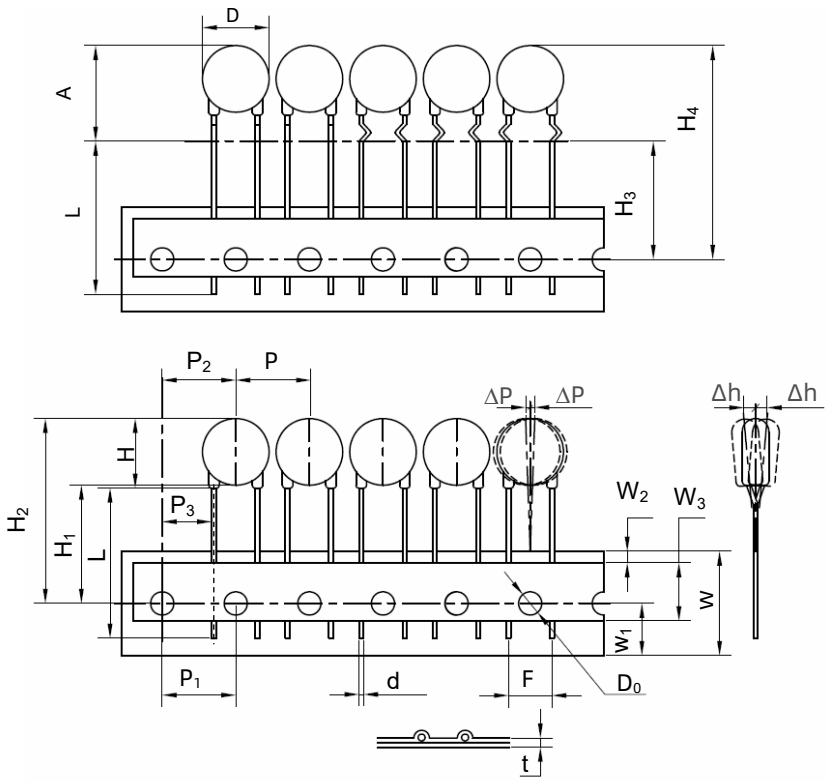

尺寸 Dimensions (mm)	
Symbol	**Dimensions**
P	12.7±1.0
P_1	12.7±0.3
P_2	12.7±1.30
P_3	8.95±0.7
ΔP(max.)	1.0
W	18.0±1.0
W_1	9.0±1.0
W_2(max.)	3.0
W_3	10.0±2.0
H(max.)	15.5
H_1	$18.0^{+2.0}_{-0}$
H_2(max.)	36.0
H_3	$18.0^{+2.0}_{-0}$
H_4(max.)	38.0
Δh(max.)	2.0
t (max.)	0.6
D(max.)	12.5
D_0	4.0±0.2
d	0.80±0.05
A(max.)	17.5
F	7.5±1.0
L(min.)	Taping

- 卷轴包装数量和重量 Reel Packaging Quantity & Weight

型号 Series	标称压敏电压 Nominal Varistor Voltage	数量/盒 Box	数量/箱 Carton	毛重/箱 (375 × 335 × 385) G.W. / Carton
	(V)	(PCS)	(PCS)	(kg)±10%
10D	220 - 391	1500	7500	6 - 11
	431 - 561	1000	5000	8 - 10
	621 - 821	800	4000	8 - 11
	911 - 122	500	2500	7 - 9

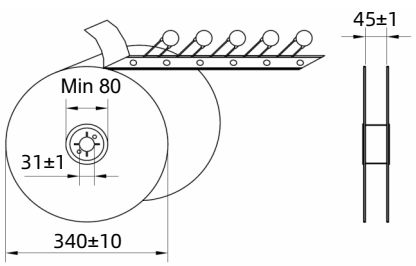

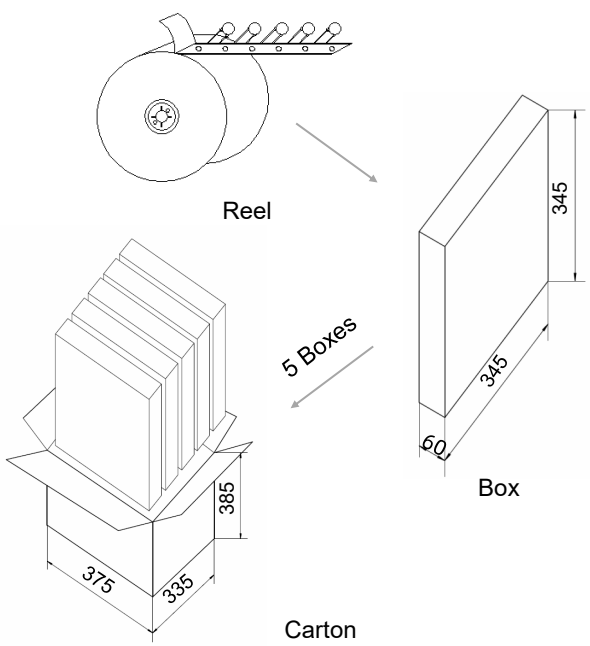

厦门赛尔特电子有限公司版权所有
All Rights Reserved by Xiamen SET Electronics Co., Ltd. 2021-2023 V3.0

注意
ATTENTION

使用 Usage

1. 压敏电阻的使用环境温度不能超出技术条件规定的范围。
   Varistor must operate within the specified ambient temp.
2. 请不要用酮类、酯类、苯类、卤代烃等强极性溶剂清洗本产品，以免破坏产品的封装层。
   Do not clean the varistor with strong polar solvent such as ketone, esters, benzene, halogenated hydro-carbon, to avoid damaging the encapsulating layer.
3. 请不要强烈的振动、冲击或施加压力，以免压敏电阻表面树脂或元件产生裂痕。
   Please do not apply severe vibration, shock or pressure to MOV, to avoid surface resin or ele ment cracking.
4. 对引线进行弯曲加工或切断加工时，请固定元件端引线。折弯距离引线绝缘覆盖部分至少2 mm。
   Please fix lead wires when bending or cutting. The distance between the bending point and the sealing of MOV shall be greater than 2 mm.

更换 Replacement

如发现压敏电阻外观有损伤，请更换。
If varistor is visually damaged, please replace it.

贮存 Storage

1. 存储温度： Storage Temp. Range: (-40 to +125) °C
2. 相对湿度： Relative Humidity: ≤75% RH
3. 海拔高度： Altitude: <2000 m

厦门赛尔特电子有限公司版权所有
All Rights Reserved by Xiamen SET Electronics Co., Ltd. 2021-2023 V3.0

4. 压敏电阻的存储应避免高温、高湿、阳光直射和腐蚀性气体的场合，以免影响引脚的可焊性，产品出厂后请于1年内使用。
   Do not store the MOV at the high temp., high humidity or corrosive gas environment, to avoid influencing the solder-ability of the lead wires, the product shall be used up within 1 year after receiving the goods.

不适宜环境条件 Environmental Conditions

1. 压敏电阻不应直接暴露在露天工作。
   Varistor should not be exposed to the open air.
2. 压敏电阻应避免在雨水，水蒸汽等高温高湿的条件下工作。
   Varistor should avoid rain, water vapor or other condition of high temp. and high humidity.
3. 压敏电阻应避免在沙尘、盐雾、有害气体的条件下工作。
   Varistor should avoid sand dust, salt spray, or other harmful gases.

MOV

压敏电阻的固有电容 Max. Typical Capacitance of Varistor

压敏电阻的固有电容最大参考值已在规格表中列出，供设计师在高频电路中选用时参考。
The typical capacitance of varistor is listed in the specifications. Designers may refer to it when designing MOV in high frequency circuit.

安装 Installation

机械应力 Mechanical Stress

安装时应避免敲击压敏电阻，以免造成机械损伤。

Do not knock MOV when installing, to avoid mechanical damage.

厦门赛尔特电子有限公司版权所有
All Rights Reserved by Xiamen SET Electronics Co., Ltd. 2021-2023 V3.0