热断保护器
Thermal Break Protector (TBP)

SGP-xx45 Series I_r: 45 A

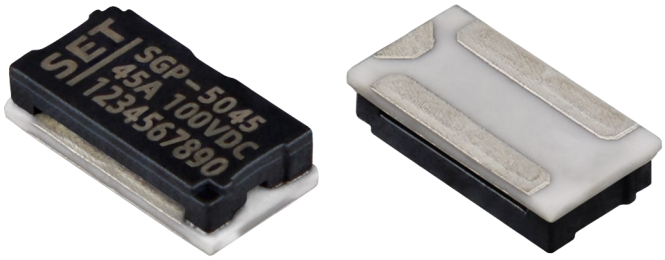

尺寸 Dimensions (mm)

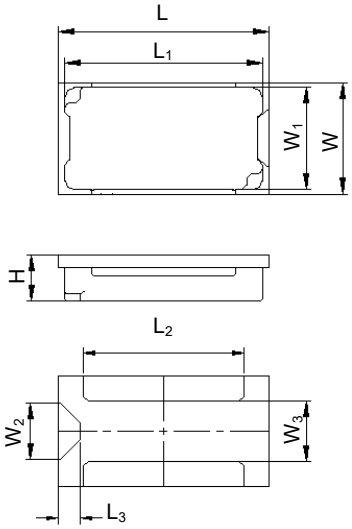

L	L_1	L_2	L_3	W	W_1	W_2	W_3	H
9.50 ± 0.30	8.90 ± 0.20	7.20 ± 0.20	1.00 ± 0.20	5.00 ± 0.30	4.60 ± 0.20	2.55 ± 0.20	2.40 ± 0.20	1.90 ± 0.20

结构图 Structure Diagrams

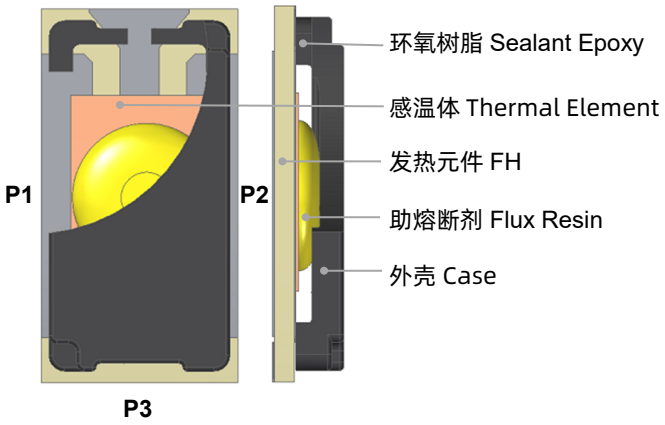

特性 Features

- 表面贴装
  Surface Mount
- 低阻抗，低功耗
  Low Impedance, Low Power Consumption
- 受控熔断时间 ≤ 60 秒
  Controlled Fusing Time ≤ 60 s
- 一次性动作而不可复位
  Non-Resettable
- 过电流保护
  Overcurrent Protection
- 过充电保护
  Overcharging Protection
- 符合 RoHS & REACH
  RoHS & REACH Compliant

产品原理图 Product Schematic

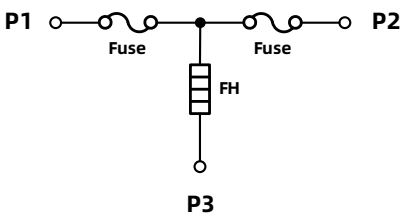

- P1 ~ P2 主电路 Main Circuit（MC）
- P1/P2 ~ P3 控制电路 Control Circuit（CC）

应用 Application

- 电动工具
  Electric Tool
- 蓄电池
  Storage Battery
- 便携式移动电源
  Portable Power Supply
- 电动摩托车
  Electric Motorcycle
- 电动自行车
  Electric Bicycle
- 家庭储能
  Household Energy Storage

TBP

厦门赛尔特电子有限公司版权所有
All Rights Reserved by Xiamen SET Electronics Co., Ltd. 2021-2023 V1.1

型号说明 Part Number System

SGP - x x 4 5

额定电流 Rated Current (A)

额定动作电压 Rated Operating Voltage (VDC)
12、14、20、30、40、50

系列 Series
SGP-xx45

产品标示 Marking

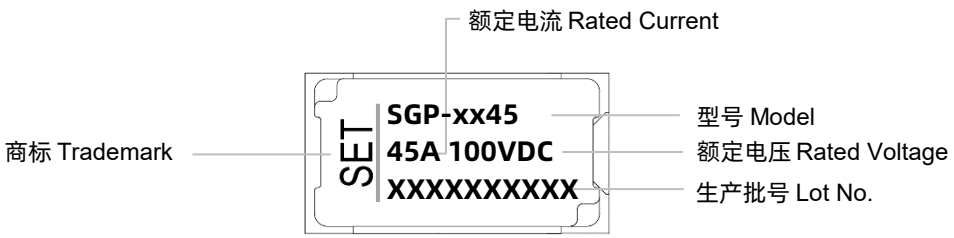

推荐贴装尺寸 Recommended Land Pattern

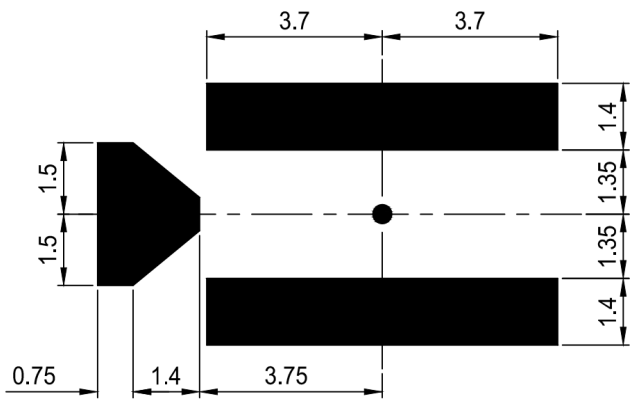

TBP

+86 592-571-5838 www.SETsafe.com www.SETfuse.com E-mail : sales@SETfuse.com

厦门赛尔特电子有限公司版权所有
All Rights Reserved by Xiamen SET Electronics Co., Ltd. 2021-2023 V1.1

术语 Glossary

项目 Item	说明 Description
TBP	**热断保护器 Thermal Break Protector（TBP)** 具有加热电阻，可导通加热电阻切断电路的保护器。 With Feed Heater , A Protector that turns on a Feed Heater to cut off circuit.
MC	**主电路 Main Circuit (MC)** 电路中用作闭合或断开电路的开关器件的所有导电部件。 All conductive components used in switching devices for closing or disconnecting circuits in a circuit.
CC	**控制电路 Control Circuit (CC)** 除主电路外，接入电路中用作开关电器的闭合操作和、或断开操作的开关电器所有导电部件。 In addition to the main circuit, all conductive parts of the switching apparatus used in the access circuit as the closing operation and / or opening operation of the switching apparatus.
I_r	**额定电流 Rated Current** 热断保护器分类用，允许用于电路并安全断开的最大电流。 The current used to classify an TBP, which is the Maximum current that TBP allows to carry and is able to cut off the circuit safely.
U_r	**额定电压 Rated Voltage** 热断保护器分类用，允许用于电路并安全断开的最高电压。 The voltage used to classify an TBP, which is the Maximum voltage that TBP allows to carry and is able to cut off the circuit safely.
FH	**发热元件 Feed Heater** 利用电能达到加热效果的元器件。 Electric appliances that use electric energy to achieve heating effect.
Breaking Capacity	**分断能力 Breaking Capacity** 以规定的电压在规定的使用条件和工作条件下熔断体能分断的预期电流值。 Value of prospective current that a fuse-link is capable of breaking at a stated voltage under prescribed conditions of use and behavior.
Range of Operation Voltage	**动作电压范围 Range of Operation Voltage** 在规定条件下，保护器可正常动作断开的电压。 Under specified conditions, the protector can operate normally to disconnect the voltage.

TBP

厦门赛尔特电子有限公司版权所有
All Rights Reserved by Xiamen SET Electronics Co., Ltd. 2021-2023 V1.1

技术参数 Specifications

型号 Model	额定电流 I_r	额定电压 U_r	电池组串数 Cells in series	分断能力 Breaking Capacity	动作电压范围 Range of Operating Voltage	内阻值 Resistance		认证标志 Agency Mark		
						R_{Fuse}	R_{FH}			
	(A)	(VDC)	(Cells)	(A)	(VDC)	(mΩ)	(Ω)	UL	cUL	TUV
SGP-1245	45	100	3	120	9.8 ~ 13.5	≤ 1.6	1.6 ~ 3.5	•	•	•
SGP-1445	45	100	4	120	13.0 ~ 18.4	≤ 1.6	3.0 ~ 5.6	•	•	•
SGP-2045	45	100	5	120	16.7 ~ 23.5	≤ 1.6	4.6 ~ 9.0	•	•	•
SGP-3045	45	100	6 ~ 7	120	22.3 ~ 31.5	≤ 1.6	10.0 ~ 17.5	•	•	•
SGP-4045	45	100	9 ~ 10	120	33.0 ~ 46.9	≤ 1.6	22.0 ~ 37.0	•	•	•
SGP-5045	45	100	12 ~ 14	120	43.7 ~ 62.0	≤ 1.6	35.0 ~ 65.0	•	•	•
电流承载能力 Current Carrying Capacity	P1 - P2施加额定电流，产品不熔断 100% x I_r, no melting									
电流熔断时间 Current Fusing Time	P1 - P2施加2倍额定电流，产品熔断时间< 1 min 200% x I_r the fusing time is < 1 min									
受控熔断时间 Controlled Fusing Time	发热元件施加动作电压，产品熔断时间< 1 min In operation voltage range, the fusing time is <1min									
耐用性能测试 Endurance Test	P1 - P2施加100 A电流5 ms，断电995 ms，循环10,000次 100 A, power on 5 ms, power off 995 ms, 10,000 cycles									

备注：P1-P2请参考结构图。
Note: For P1-P2, please refer to the structure diagram.

电流-时间曲线（仅供参考）Product Current-Time Curve (Reference)

在室温条件下，测试P1 - P2数倍过载电流下的断开时间曲线。
The Current-Time curve shows functioning time at multi-times rated current at room temperature.

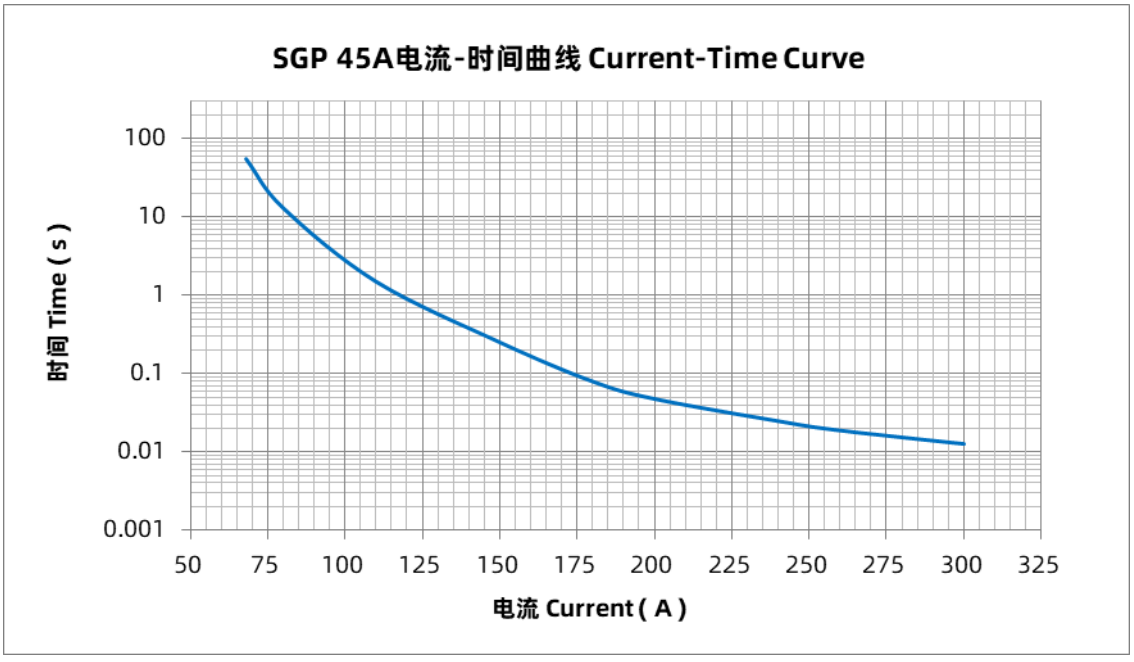

厦门赛尔特电子有限公司版权所有
All Rights Reserved by Xiamen SET Electronics Co., Ltd. 2021-2023 V1.1

受控熔断时间曲线图（仅供参考）Controlled Fusing Time Curve (Reference)

在室温下发热元件施加动作电压，采集P1-P2的断开时间。
The FH applies the operating voltage at room temperature, and collects the disconnection time of P1-P2.

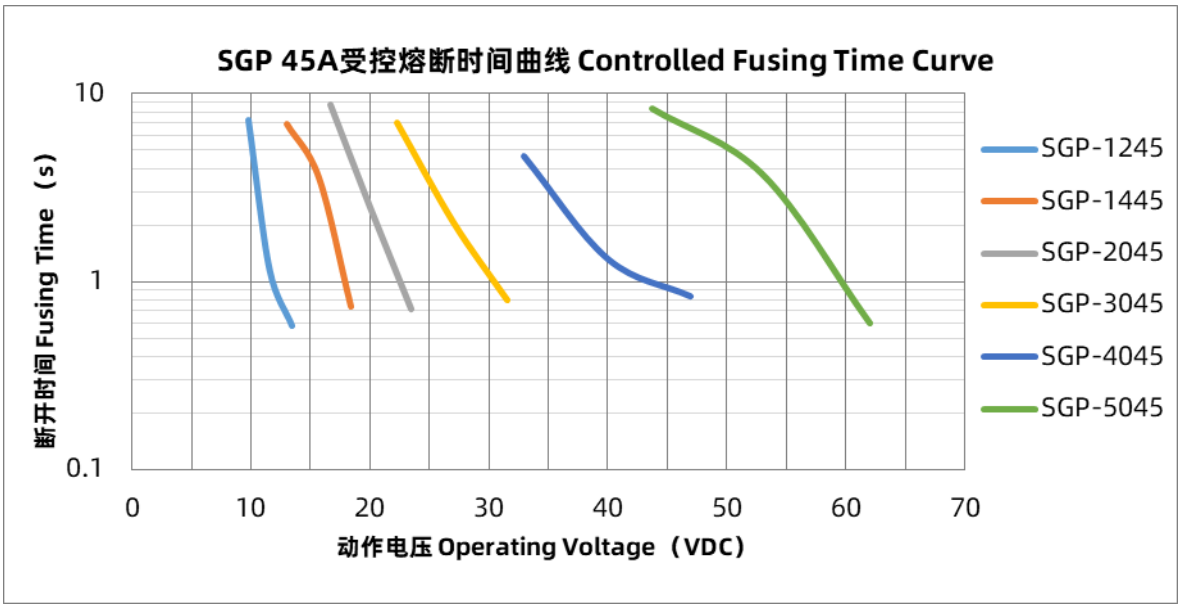

载流能力曲线（仅供参考）Current Carrying Capacity (Reference)

在不同温度下，P1 - P2通以测试电流，采集产品表面温度达到设定值。
Under different temperatures apply test current collect the surface temperature of the product to reach the set value.

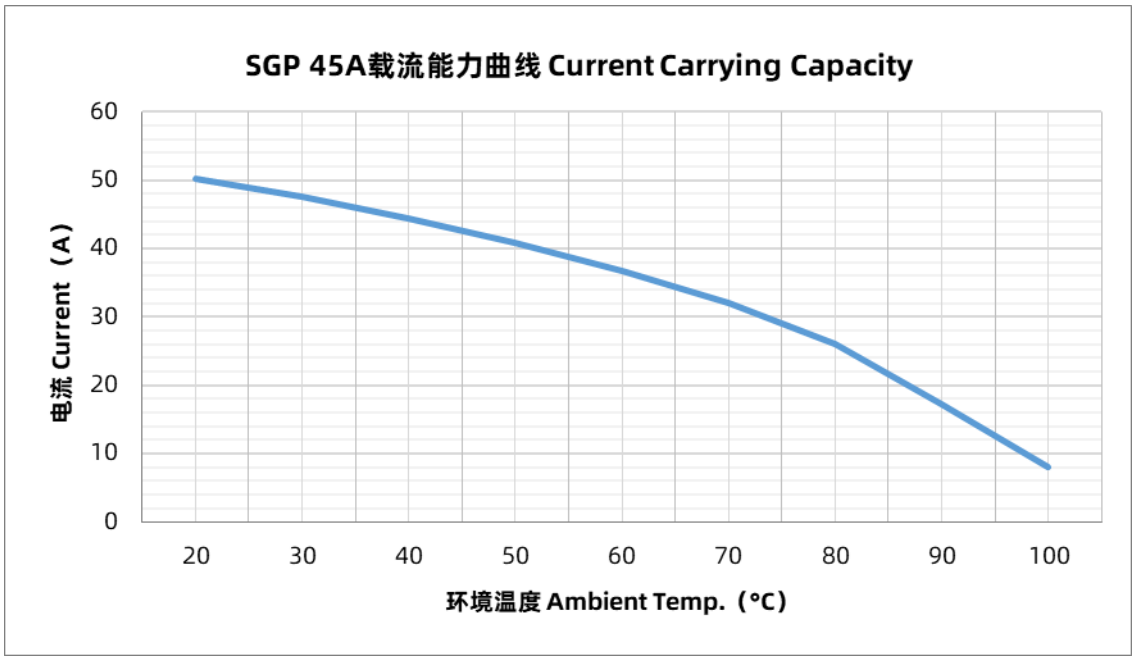

TBP

厦门赛尔特电子有限公司版权所有
All Rights Reserved by Xiamen SET Electronics Co., Ltd. 2021-2023 V1.1

包装信息 Packing Information

项目 Item	卷轴 Reel	外箱 Carton
尺寸 Dimensions (mm)	Φ330 × 22.7	340 × 240 × 345
数量 Quantity (PCS)	3000	30000
毛重 Gross Weight (kg)	11 ± 10 %	

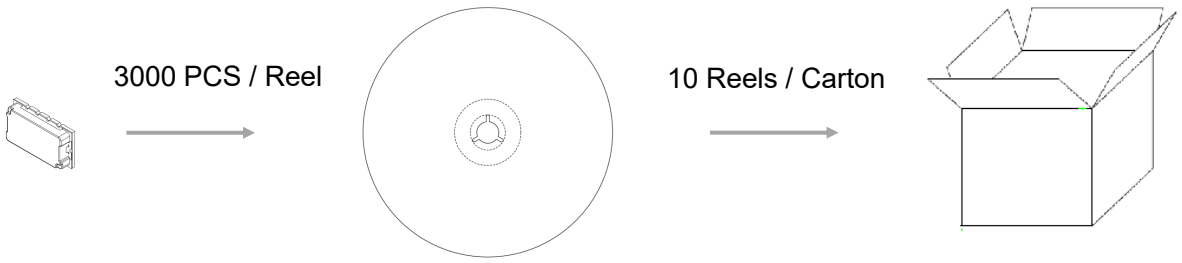

TBP

厦门赛尔特电子有限公司版权所有
All Rights Reserved by Xiamen SET Electronics Co., Ltd. 2021-2023 V1.1

注意
ATTENTION

TBP

使用 Usage

1. 大气压：（80 ~ 106 ）kPa，海拔高度：（-500 ~ 2000）m。
   When atmosphere press is from 80 kPa to 106 kPa, the related altitude shall be from 2,000 meter to -500 meter.
2. 通电时请勿直接触摸TBP本体或引线，以免引起灼伤或触电。
   Do not touch the TBP body or electrode lead directly when power is on, to avoid burning or electric shocking.
3. “电流承载能力”与“受控熔断时间”可能会由于基板热容量等条件变化而发生变动。所以请在客户实际使用的基板上进行组装确认。一般情况下，多层基板、双面铜箔、基材厚度增加等原因，可能会引起通电极限电流（电流承载能力）变大，切断时间增长的情况。
   It is necessary to foresee there are possibilities that “Current carrying Capacity” and “Controlled Fusing Time” may be varied along with the condition change in the substrate thermal capacity, etc. Therefore you should check it on your PCB.
   Generally, when thermal capacity of PCB increases, Current carrying capacity will increase accordingly and Clearing-time will be longer.
4. 本产品是针对一般的电子设备的标准用途来设计制造的，因此并未设想到本产品被用于危害生命或财产等用途（军事，医疗用途等）。
   This product is designed and produced for only general-use of electronics devices. Therefore, we do not suppose that it is used for the applications [Military, Medical and so on] which may cause direct damages on life, bodies or properties of third party.

厦门赛尔特电子有限公司版权所有
All Rights Reserved by Xiamen SET Electronics Co., Ltd. 2021-2023 V1.1

安装 Installation

1. 贴片式表面安装。
   Patch type surface mounting.
2. 安装过程和安装后不宜对保护器本体施加机械应力。
   Do not apply mechanical stress to the protection body during or after the installation.
3. 热断保护器在实装前和实装后，如果进行清洁（超声波或者清洁剂），保险丝表面的助焊剂会流失，从而出现无法满足规格的情况。如果本产品接触到清洁剂，也有可能发生同样的情况。因此请避免对本产品进行清洗，也请注意如果对本产品进行了清洗，我们将不提供品质保证。
   Ultrasonic-cleaning or immersion-cleaning and so on must not be done to TBP before and after mounted. When cleaning is done, flux on element would flow, and it would not be satisfied its specification. Moreover, a similar influence happens when the product comes in contact with cleaning-solution. These products after cleaning will not be guaranteed.
4. 已经焊锡实装又取下来的产品，请不要再次使用。
   Please do not re-use of the TBP removed by the solder correction.
5. 如果对热断保护器进行树脂封装，树脂可能会流到产品内部而导致不能满足规格，所以请避免树脂封装。也请注意进行了树脂封装的产品，我们将不提供品质保证。
   Please avoid contacting TBP and resin-mold. The resin might infiltrate into the product, and it doesn't meet the specification when the resin-mold is done to this product. These products after resin-mold will not be guaranteed.
6. 关于搭载本产品的基板，请确认端子与焊盘切实接触，端子P1 - P3之间、P2 - P3之间的电阻值应在加热电阻器的电阻范围内。
   Make sure that the terminals of this product are connected property on the land of circuit board, and the value falls in the rated heater resistance between Terminal P1 - P3 and P2 - P3.

焊接参数 Soldering Parameters

1. 回流焊曲线 Reflow Soldering Method (仅供参考 For Reference Only)

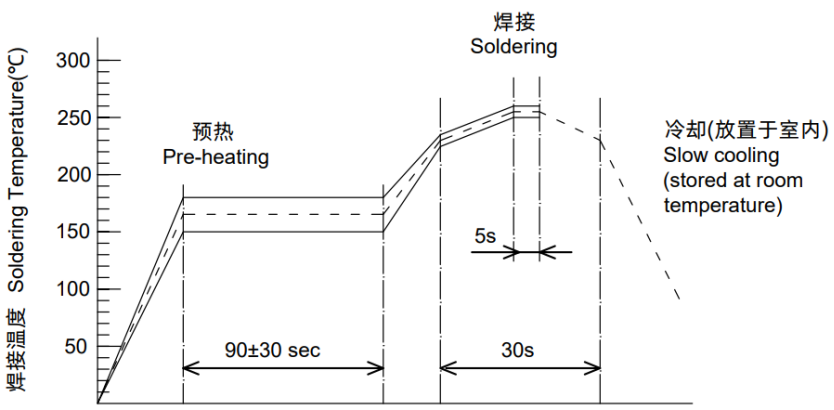

最高温度 Peak Temp:255℃ ± 5℃ 5 sec
230℃ ± 5℃ 30 sec

2. 推荐的手工焊参数 Recommended Soldering Parameters

烙铁温度 Solder Iron Temp.:（300 ± 5）℃

焊接时间 Soldering Time:≤ 3 s

TBP

厦门赛尔特电子有限公司版权所有
All Rights Reserved by Xiamen SET Electronics Co., Ltd. 2021-2023 V1.1

更换 Replacement

热断保护器是不可修复的产品。基于安全原因，替换时应使用同类别同型号的热断保护器并且严格按照同样的方法正确安装 。
TBP is a non-repairable product. For safety aspect, it shall be replaced by an equivalent TBP, and mounted in the same way.

存储 Storage

1. 热断保护器须存储于(10 ~ 30) °C 、湿度(30 ~ 70)% RH的条件，没有急剧温度变化，空气中无腐蚀性气体及大量灰尘的阴凉处。本产品应在收到货物后一年内用完。
   TBP must be stored in shaded area where it is not too dusty, with temp. (10 to 30) °C or less with no sudden temperature change, humidity within (30 to 70) % RH, and no corrosive gas in the air. please use them up within 1 year after receiving the goods.
2. 本产品采用银端子。银容易与硫化性的气体反应，可能发生变色等变质的情况，请充分注意如下的保管环境。
   This product's terminals use Ag plating. Ag terminals tend to easily get sulfurized or tarnished, please be cautious about their storage environment as follows.
   (1)即使未开封，也请遵守存储第1条的保管条件。
   Unopen packages also must be stored under the storage condition described in Storage Section 1.
   (2)开封后，请使用气体防护性比较高的袋子（铝箔袋等）来密封，按照存储第1条的保管条件进行保存。
   After opening packages, products shall be sealed in a bag with high gas barrier property (e.g. aluminum laminated bag), and must be stored under the storage condition described in Storage Section 1.

TBP

厦门赛尔特电子有限公司版权所有
All Rights Reserved by Xiamen SET Electronics Co., Ltd. 2021-2023 V1.1