温度保险丝
DC-Alloy Thermal-Link

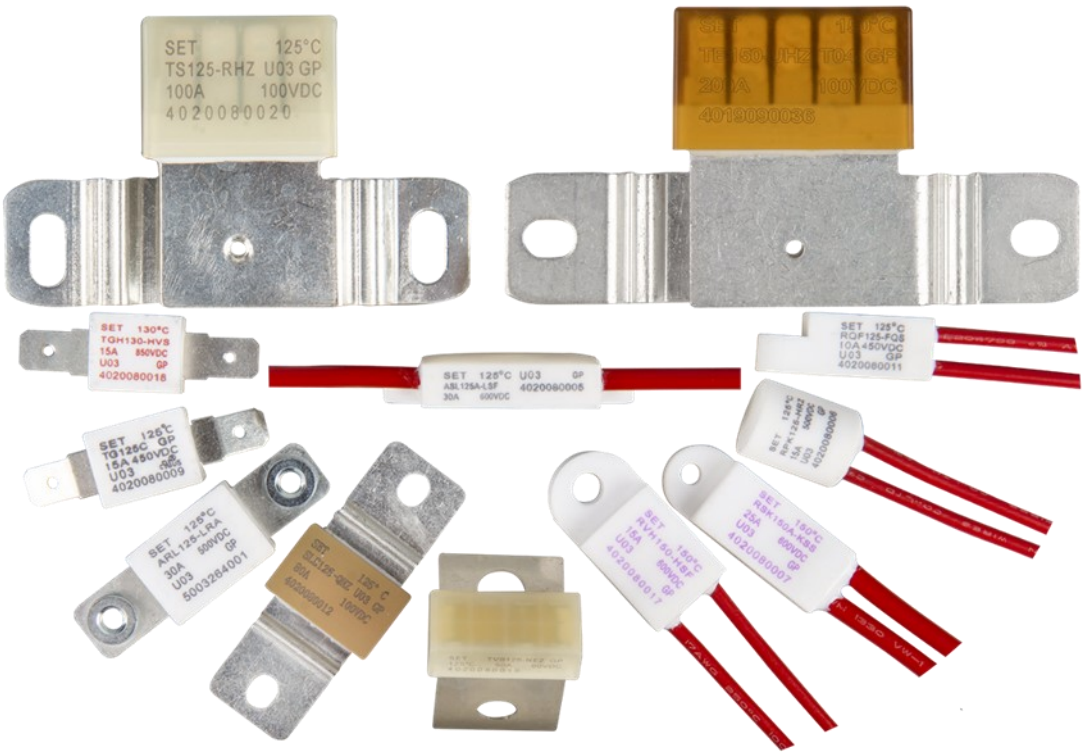

特征 Features

- 低阻抗，低功耗 — Low Impedance, Low Power Consumption
- 一次性动作而不可复位 — Non-Resettable
- 过温保护 — Over Temp. Protection
- 优越的抗振性 — Superior Vibration Resistance
- 符合 RoHS & REACH — RoHS & REACH Compliant
- 额定电流：（10 ~ 200）A — Rated Current：(10 to 200) A
- 额定电压：（60 ~ 850）VDC — Rated Voltage: (60 to 850) VDC
- 额定动作温度：（76 ~ 230）℃ — Rated Functioning Temp. :（76 to 230）℃
- 专利产品 — Patented product

厦门赛尔特电子有限公司版权所有
All Rights Reserved by Xiamen SET Electronics Co., Ltd. 2021-2023 V2.1

温度保险丝特性与型号概览
Thermal-Link (DC-ATCO) Features & Model List Overview

额定动作温度 Rated Functioning Temp. T_f (°C)	页码 Page: 39	12	39	20	24	47	16
200	○	○	○	○	○	○	○
187	○	RQF187-FQS	○	○	RSK187A-KSS	ARL187-LRA	RVH187-HSF
160	○	○	○	○	○	○	○
150	TG150C-JPZ	RQF150-FQS	TG150C-HQZ	RPK150-HRZ	RSK150A-KSS	ARL150-LRA	RVH150-HSF
145	○	○	○	○	○	○	○
139	○	○	○	○	○	○	○
136	TG136C-JPZ	RQF136-FQS	TG136C-HQZ	RPK136-HRZ	RSK136A-KSS	ARL136-LRA	RVH136-HSF
135	○	○	○	○	○	○	○
133	○	○	○	○	○	○	○
130	○	RQF130-FQS	○	○	○	○	RVH130-HSF
125	TG125C-JPZ	RQF125-FQS	TG125C-HQZ	RPK125-HRZ	RSK125A-KSS	ARL125-LRA	RVH125-HSF
123	○	○	○	○	○	○	○
120	○	○	○	○	○	○	○
115	TG115C-JPZ	RQF115-FQS	TG115C-HQZ	RPK115-HRZ	RSK115A-KSS	ARL115-LRA	RVH115-HSF
105	○	○	○	○	○	○	○
102	TG102C-JPZ	RQF102-FQS	TG102C-HQZ	RPK102-HRZ	RSK102A-KSS	ARL102-LRA	RVH102-HSF
97	○	○	○	○	○	○	○
95	○	○	○	○	○	○	○
86	○	RQF86-FQS	TG86C-HQZ	○	○	ARL86-LRA	○
76	○	○	○	○	○	○	○
I_r (A) 额定电流 Rated Current	20	10	15	15	25	30	15
U_r (VDC) 额定电压 Rated Voltage	400	450		500	600	500	600
产品结构 Product Structure	轴向型 Axial Shape	径向型 Radial Shape	轴向型 Axial Shape	径向型 Radial Shape		轴向型 Axial Shape	径向型 Radial Shape

型号 Model

+86-592-571-5838 www.SETfuse.com www.SETsafe.com E-mail : sales@SETfuse.com

All Rights Reserved by Xiamen SET Electronics Co., Ltd. 2021-2023 V2.1
厦门赛尔特电子有限公司版权所有

SETsafe | SETfuse

温度保险丝特性与型号概览
Thermal-Link (DC-ATCO) Features & Model List Overview

额定动作温度 Rated Functioning Temp. T_f (°C)	页码 Page: 28	43	39	39	36	32	36	32
200	○	○	○	○	○	○	○	○
187	ASL187A-LSF	TGH187-HVS	○	○	○	○	○	○
160	○	○	○	○	○	○	○	○
150	ASL150A-LSF	TGH150-HVS	○	TG150C-JSZ	○	○	○	○
145	○	○	○	○	○	○	○	○
139	○	○	○	○	○	○	○	○
136	ASL136A-LSF	TGH136-HVS	○	TG136C-JSZ	TB136-UHZ	TS136-RHZ	TB136-UJZ	TS136-RJZ
135	○	○	○	○	○	○	○	○
133	○	○	○	○	○	○	○	○
130	○	TGH130-HVS	○	○	TB130-UHZ	○	TB130-UJZ	○
125	ASL125A-LSF	TGH125-HVS	○	TG125C-JSZ	TB125-UHZ	TS125-RHZ	TB125-UJZ	TS125-RJZ
123	○	○	○	○	○	○	○	○
120	○	○	○	○	○	○	○	○
115	ASL115A-LSF	TGH115-HVS	○	TG115C-JSZ	TB115-UHZ	TS115-RHZ	TB115-UJZ	TS115-RJZ
105	○	○	○	○	○	○	○	○
102	ASL102A-LSF	TGH102-HVS	○	TG102C-JSZ	TB102-UHZ	TS102-RHZ	TB102-UJZ	TS102-RJZ
97	○	○	○	○	○	○	○	○
95	○	○	○	○	○	○	○	○
86	○	○	TG86C-HSZ	○	○	○	○	○
76	○	○	○	○	○	○	○	○
I_r (A) 额定电流 Rated Current	30	15	15	20	200	100	200	100
U_r (VDC)/(VAC) 额定电压 Rated Voltage	600 (VDC)	850 (VDC)	600 (VAC)		100 (VDC)		125 (VAC)	
产品结构 Product Structure		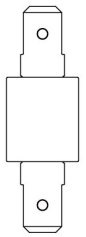	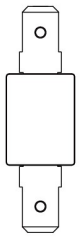	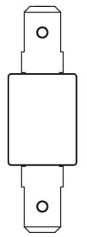	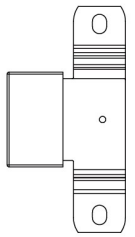	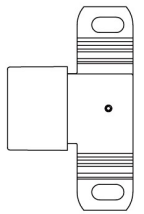	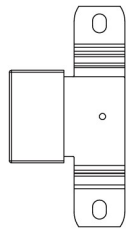	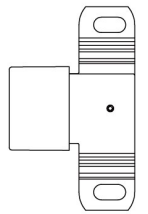
	径向型 Radial Shape		轴向型 Axial Shape		径向型 Radial Shape			

型号 Model

+86-592-571-5838 www.SETfuse.com www.SETsafe.com E-mail : sales@SETfuse.com

All Rights Reserved by Xiamen SET Electronics Co., Ltd. 2021-2023 V2.1
厦门赛尔特电子有限公司版权所有

SETsafe | SETfuse

温度保险丝
DC-Alloy Thermal-Link

产品描述 Description

直流合金型温度保险丝是一次性动作而不可复位的装置。它广泛应用于电气设备及电动汽车的过温保护。其主要由低熔点的感温体、助熔断剂、外壳、封口树脂和引线组成。在正常工作情况下，感温体与两根引线保持连接，当直流合金型温度保险丝感受到异常发热并达到预定的熔断温度时，感温体熔化，并在助熔断剂的作用下快速收缩至引线两端，从而断开电路。

赛尔特公司 (SETsafe | SETfuse) 的直流合金型温度保险丝结构分为轴向型和径向型，额定动作温度：（76 ~ 230) °C、额定电流：(10 ~ 200) A，安规认证包括：UL、cUL ，符合RoHS、REACH 要求。

DC-Alloy Thermal-Link / DC-Alloy Thermal Cutoff (DC-ATCO) is defined as a non-resettable protective device functioning one time only. It is widely used in electrical equipment and electric vehicle. DC-ATCO is mainly consist of Thermal Element, Flux Resin, Case, Sealant and Lead Wires. Normally, thermal element is jointed to the two lead wires. Under abnormal conditions, when the temp. reaches to the fusing temp. of DC-ATCO, the thermal element melts and quickly retracts to the two lead wire ends with the aid of the flux resin and disconnects the circuit completely.
SETsafe | SETfuse DC-Alloy Thermal-Link is classified into Axial and Radial shapes, with Rated Current 10 A to 200 A, Rated Functioning Temp. 76 °C to 230 °C, with UL, cUL Approvals and RoHS, REACH compliant.

结构图 Structure

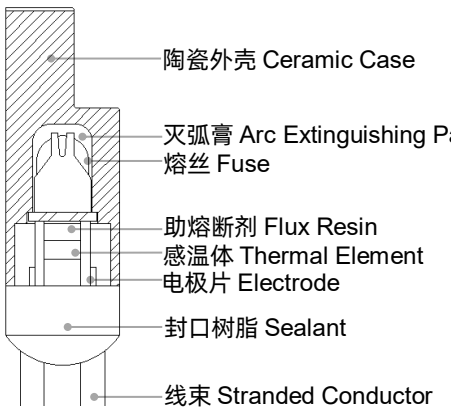

轴向型 Axial Shape

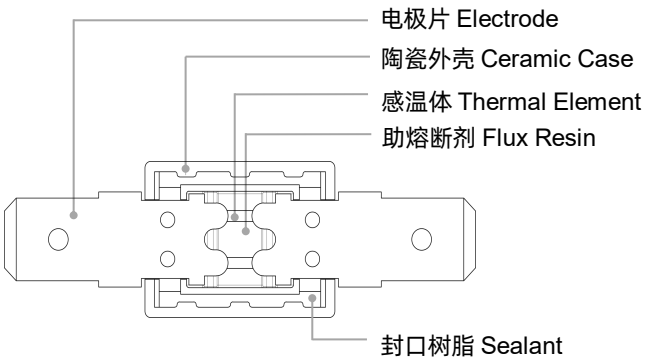

径向型 Radial Shape

产品标识 Marking

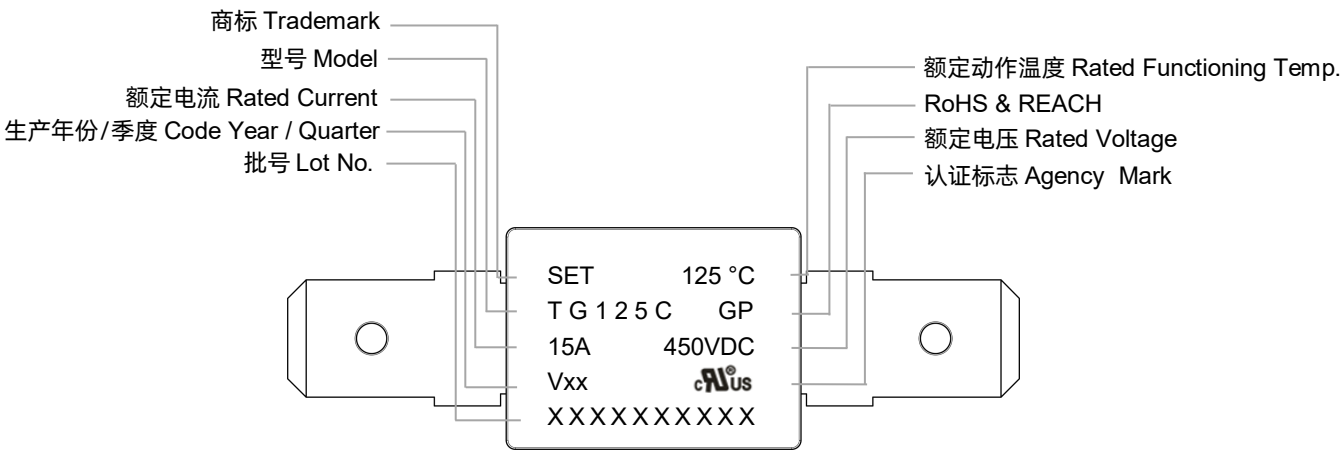

厦门赛尔特电子有限公司版权所有
All Rights Reserved by Xiamen SET Electronics Co., Ltd. 2021-2023 V2.1

ATCO

型号说明 Part Number System

DC-ATCO-TG125C - H Q Z

最小断开电流 Minimum Breaking Current (A)
Z:无熔丝 Without Inbuilt Fuse

额定电压和额定电流 Rated Voltage and Rated Current

HQ:	15 A	450 VDC	
JP:	20 A	400 VDC	(Just for 102 ºC to 150 ºC)
HS:	15 A	600 VAC	(Just for 86 ºC)
JS:	20 A	600 VAC	(Just for 102 ºC to 150 ºC)

动作温度 Functioning Temp. (ºC)
86
102
115
125
136
150

系列 Series
TGxxxC

产品类别Product Category
DC-Alloy Thermal-Link

ATCO

厦门赛尔特电子有限公司版权所有
All Rights Reserved by Xiamen SET Electronics Co., Ltd. 2021-2023 V2.1

术语Glossary

项目 Item	说明 Description
TCO	**热熔断体 Thermal-Link** 热熔断体也称为热断路器或温度保险丝，在本文中这些不同名词都代表同样的产品，为一次性动作而不可复位的元件。 A non-resettable device incorporating a THERMAL ELEMENT which will open a circuit once only when exposed for a sufficient length of time to a temperature in excess of that for which it has been designed.
ATCO	**合金型热熔断体 Alloy Thermal-Link** 合金类型温度保险丝，合金是热敏元件。 Alloy Type Thermal-Link, Alloy is the thermal element.
DC-ATCO	**直流热熔断体 DC-Alloy Thermal-Link** 直流合金型温度保险丝，由易熔合金作为感温部件的热熔断体 。 DC-Alloy type Thermal-Link, Alloy is thermal element.
T_f	**额定动作温度 Rated Functioning Temp.** 通10 mA以下的负载电流时，加热使温度保险丝断开的温度。 The temperature of the Thermal-Link which causes it to change the state of conductivity with a detection current up to 10 mA as the only load. Tolerance: T_f 0 / -10 °C (GB 9816, EN 60691, K60691). Tolerance: T_f ± 7 °C (J60691).
Fusing Temp.	**实测熔断温度 Fusing Temp.** 置于油池中，通10 mA以下的负载电流，每分钟升温0.5 °C ~ 1 °C，测断开温度。 The temperature of the Alloy Thermal-Link which causes it to change its state of conductivity is measured with silicone oil bath in which the temperature is increased at the rate of 0.5 °C to 1 °C / minute, with a detection current up to 10 mA as the only load.
T_h	**保持温度 Holding Temp.** 持续通额定电流168小时不断开的最高温度。 The Maximum temperature at which a Thermal-Link will not change its state of conductivity when conducting rated current for 168 hours.
T_m	**极限温度 Maximum Temp. Limit** 在规定的时间内不破坏机械和电气特性所能承受的最高温度。 The temperature of the Thermal-Link stated by the manufacturer, up to which the mechanical and electrical properties of the Thermal-Link having changed its state of conductivity, will not be impaired for a given time.
I_{min}	**最小断开电流 Minimum Breaking Current** 温度保险丝工作时实际允许用于电路，并安全断开的最小电流。 The minimum current that Fuse requires after the Alloy of Thermal-Link opens in the circuit.
I_r	**额定电流 Rated Current** 温度保险丝分类用，允许用于电路并安全断开的最大电流。 The current used to classify a Thermal-Link, which is the maximum current that Thermal-Link allows to carry and is able to cut off the circuit safely.
U_r	**额定电压 Rated Voltage** 温度保险丝分类用，允许用于电路并安全断开的最高电压。 The voltage used to classify a Thermal-Link, which is the maximum voltage that Thermal-link allows to carry and is able to cut off the circuit safely.

厦门赛尔特电子有限公司版权所有
All Rights Reserved by Xiamen SET Electronics Co., Ltd. 2021-2023 V2.1

注意

ATTENTION

使用方法 Usage

1. 大气压：（80 to 106 ）kPa，海拔高度：（-500 to 2000）m。
   When atmosphere pressure is from 80 kPa to 106 kPa, the related altitude shall be from +2000 m to - 500 m.
2. 工作电压不超过温度保险丝的额定电压；工作电流不超过额定电流。
   Operating voltage less than rated voltage of DC-ATCO, operating current less than rated current of DC-ATCO.
3. 通电情况下请勿用人体直接触碰本体或引脚，防止烫伤或触电。
   Do not touch the DC-ATCO body or lead wires directly when power is on, to avoid burn or electric shock.

更换 Replacement

温度保险丝是不可修复的产品。基于安全原因，替换时应使用同类别、同型号的温度保险丝并且严格按照同样的方法正确安装。
DC-ATCO is a non-repairable product. For safety sake, it shall be replaced by an equivalent DC-ATCO from the same manufacturer, and mounted in the same way.

存贮 Storage

温度保险丝的贮存应避免高温、高湿、日光直射和腐蚀性气体的场合，储存温度为 25 ± 5 °C，相对湿度 ≤ 70%，避免阳光直射，产品购入后请于1年内使用完毕。
Do not store the DC-ATCO at the high temp., high humidity or corrosive gas environment. The product shall be stored at 25 ± 5 °C and ≤ 70% RH, avoid direct sunlight and shall use them up within 1 year after receiving the goods.

厦门赛尔特电子有限公司版权所有
All Rights Reserved by Xiamen SET Electronics Co., Ltd. 2021-2023 V2.1

安装 Installation

安装位置的温度确定 Make Sure the Temp. of Installation Position

1. 建议采用内置热电偶式的仿真温度保险丝来确定适合的温度要求。
   It is recommended that a dummy DC-ATCO with inbuilt thermo-couple shall be used to determine the proper temp.
2. 需对终端产品进行测试，以确保潜在的异常状况不会导致温度保险丝超过其极限温度。
   The terminal product should be tested to ensure that potential abnormal conditions do not cause ambient temp. to exceed the T_m of the DC-ATCO.
3. 将温度保险丝安装在可使其温度平稳上升的部位。
   Mount the DC-ATCO at the location where temp. rises evenly.

安装位置的机械性能要求 Installation position of mechanical performance requirements

1. 确保引线足够长，且其安装方法不会造成强行按压、拉伸及扭转引线之现象。
   Ensure that the lead wire is long enough, and avoid actions such as press, tensile or twist.
2. 保险丝的封口及主体不能受损、燃烧或过热。
   The seal or body of DC-ATCO must not be damaged, burned or over heated.

机械连接 Mechanical Connection

铆接 Riveting

1. 选用电阻率小的铆接材料和被铆接材料。
   Choose small resistivity riveting material and be riveted.
2. 采用柔韧的、易弯曲的引线来与温度保险丝铆接。
   A flexible lead or lead with low resistance should be used to rivet the DC-ATCO.
3. 应确保铆接后的接触电阻为最小值，过大的接触电阻会产生较高的温升，造成温度保险丝提前熔断。
   Contact resistance should be minimal, Large contact resistance will lead to higher temp., DC-ATCO Functioning in advance.

焊接 Soldering

手工焊接 Hand-Soldering

1. 焊接必须在表 T-1 所列的条件下进行。
   Soldering should be carried out according to Table T-1.
2. 由于温度保险丝中与引线连接的感温体是低熔点的合金，因此不正确的焊接操作（例如：温度过高、焊接时间过长、引线过短等）可能导致感温体被引线传递的过高热量所影响，从而使得温度保险丝提前断开。
   The thermal element of DC-ATCO is thermal element with low melting point, which is jointed with DC-ATCO lead wires. Improper soldering operation (too high soldering temp. , too long soldering time, too short lead wire etc.) may transfer more heat to the thermal element and DC-ATCO may open in advance.
3. 若需要在比表 T-1 规定更为严苛环境下进行焊接时，应在焊接点和温度保险丝主体间的引线上使用散热装置。
   When soldering conditions are more severe than those listed in Table T-1, a heat sink fixture should be used between soldering point and DC-ATCO body.
4. 焊接时应小心，以避免温度保险丝主体和引线遭受到推 / 拉力以及扭力。
   When soldering, please do not pull / push or twist DC-ATCO body or lead wires.
5. 焊接后应让其自然冷却 20 秒以上，在冷却期间，勿移动温度保险丝本体和引线。
   After soldering, let it naturally cool for longer than 20 seconds. During cooling, never move the DC-ATCO body or lead wires.

厦门赛尔特电子有限公司版权所有
All Rights Reserved by Xiamen SET Electronics Co., Ltd. 2021-2023 V2.1

表 T-1：手工焊接时间 TABLE T-1 Hand-Soldering Time

额定动作温度 Rated Functioning Temp. (T_f)	不同引线长度对应的最大允许焊接时间 Max. Allowable Soldering Time for Different Lead Wire Length (Fig.H-1)						最高焊接温度 Max. Soldering Temp.
	L_5长度 Length	时间 Time 镀锡铜线Tinned Copper Wire	L_5长度 Length	时间 Time 镀锡铜线Tinned Copper Wire	L_5长度 Length	时间 Time 镀锡铜线Tinned Copper Wire	
(°C)	(mm)	(s)	(mm)	(s)	(mm)	(s)	(°C)
76 ~ 101	10	1[a]	20	2	30	3	400
102 ~ 115	10	1[a]	20	2	30	3	
116 ~ 135	10	1[a]	20	3	30	5	
136 ~ 150	10	3	20	5	30	5	
151 ~ 230	10	4	20	6	30	7	

※ 需要使用辅助散热器固定装置，以防止DC-ATCO意外切断。
Auxiliary heat sink fixture is required to avoid DC-ATCO cutting off unexpectedly.

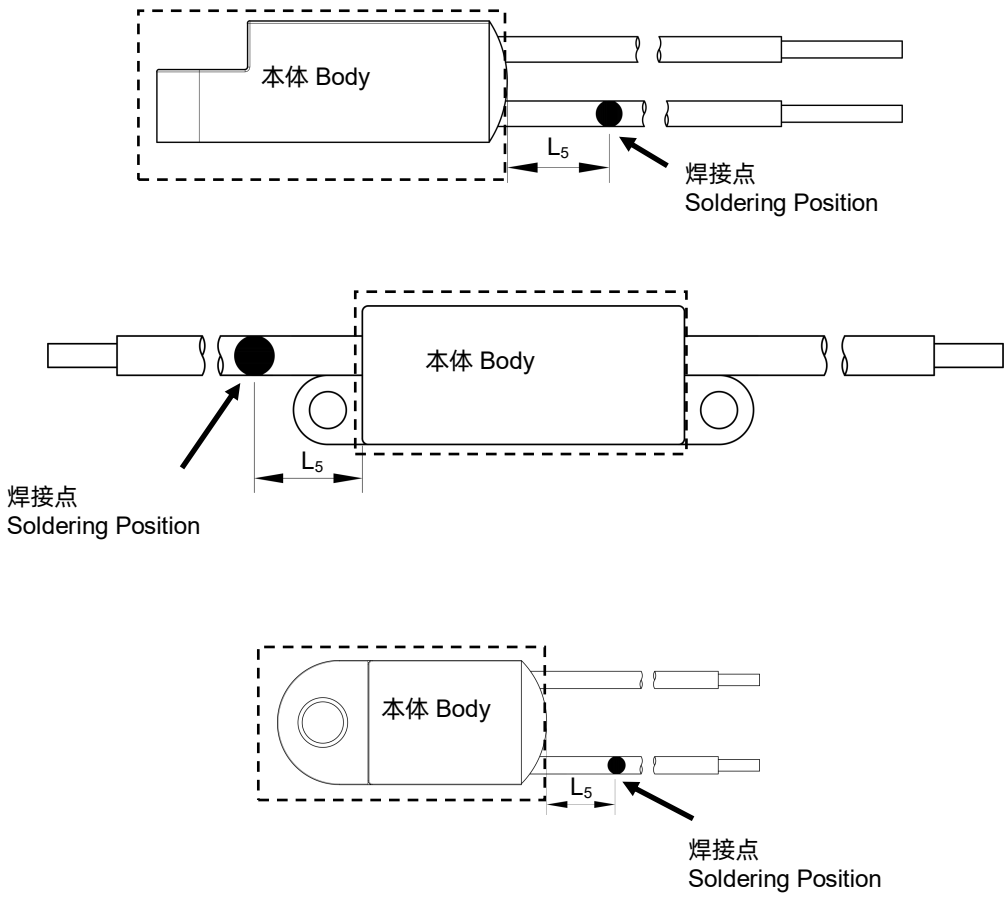

图 FIGURE T-1

厦门赛尔特电子有限公司版权所有
All Rights Reserved by Xiamen SET Electronics Co., Ltd. 2021-2023 V2.1

引线成型 Lead Wire Forming

1. 如果一定要弯折引线，那么应确保弯折处与主体间的距离,如表T-3。
   If lead wire has to be bent, please pay attention to the distance between body and bending point. Refer to Table T-3.
2. 弯折引线时请使用钳子或其它工具固定（如图T-2 所示），以免损坏产品。
   When bending leads, please use pincher or similar tools to fix the product as shown in Fig.T-2、to avoid damaging the product.
3. 成形和安装过程中，对引线进行裁切、切割、弯折时，请勿用力过猛，以免造成产品断裂或本体损伤。
   During forming and mounting, lead wire should not be cut, nicked, bent sharply, to avoid breaking the product.
4. 避免直接对引线根部施加外力（比如与温度保险丝主体成一定角度推或拉），以免损坏温度保险丝封口。
   Tangential forces on the leads must be avoided (i.e. pushing or pulling on the leads at angle to DC-ATCO body) as such forces may damage the seal of DC-ATCO.
5. 折弯半径R:≥15d,如图2所示。
   Bending radius R: ≥15d, as shown in Figure 2.

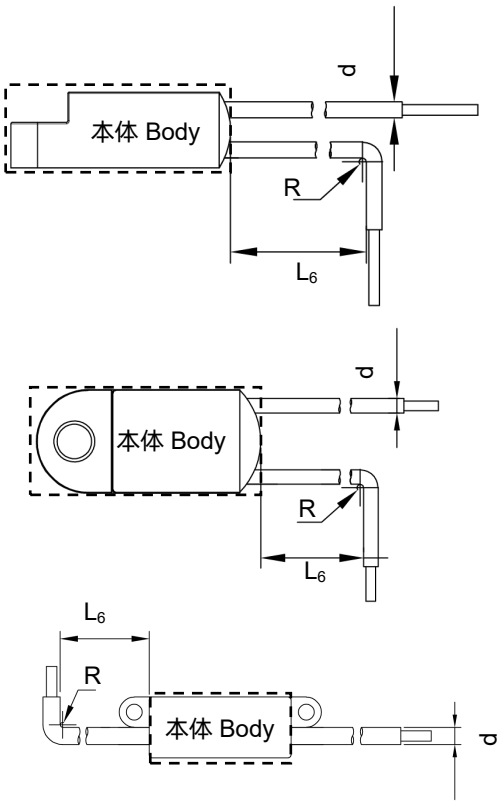

图 FIGURE T-2

表 T-3 本体与折弯处之间的距离
TABLE T-3 Distance between Body and Bending Point

引线 Lead Wire	d	(mm)	≤ 1.0	1.0 to 1.2	> 1.2
	L_6	(mm)	≥ 3	≥ 5	≥ 10

厦门赛尔特电子有限公司版权所有
All Rights Reserved by Xiamen SET Electronics Co., Ltd. 2021-2023 V2.1

温度保险丝
DC-Alloy Thermal-Link

TB Series I_r: 200 A

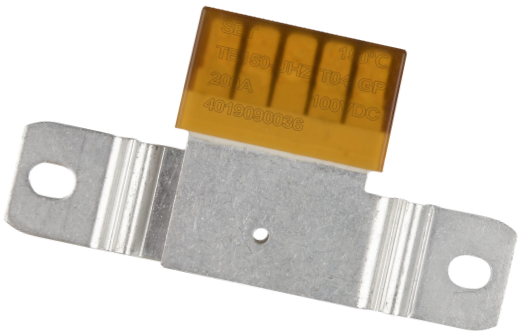

结构图 Structure Diagram

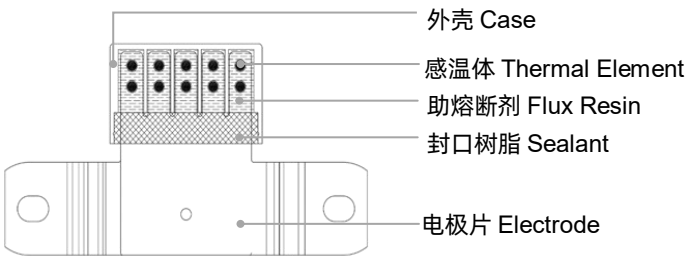

特性 Features

- 动作温度精确 High Accuracy of Functioning Temp.
- 一次性动作不可复位 Non-Resettable
- 符合RoHS 、 REACH要求 RoHS & REACH Compliant
- DC 200 A

应用 Applications

- 电动汽车电池模组 EV Battery Modules
- 电源 Power Supplies

定制 Customization

- 额定动作温度 Rated Functioning Temp.
- 电极片的形状 The Shape of Electrode

尺寸 Dimensions (mm)

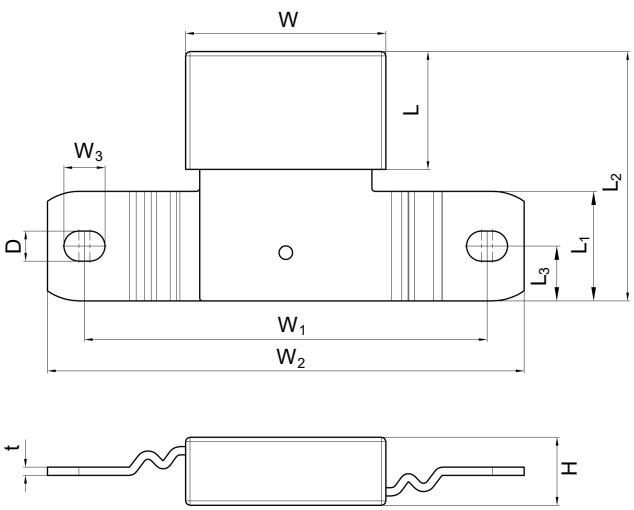

L	L_1	L_2	L_3	W	W_1	W_2	W_3	D	H	t
21.5 ± 0.5	20.0 ± 0.2	45.5 ± 2.0	10.0 ± 0.2	36.5 ± 0.5	73.4 ± 2.0	86.9 ± 2.0	7.50 ± 0.15	5.5 ± 0.2	12.4 ± 0.5	1.50 ± 0.05

厦门赛尔特电子有限公司版权所有
All Rights Reserved by Xiamen SET Electronics Co., Ltd. 2021-2023 V2.1

ATCO

技术参数 Specifications

型号 Model	额定动作温度 T_f (°C)	实测熔断温度 Fusing Temp. (°C)	保持温度 T_h (°C)	极限温度 T_m (°C)	额定电流 I_r (A)	额定电压 U_r (V)	RoHS REACH
TB102-UJZ	102	98 ± 3	57	180	200	AC 125	●
TB102-UHZ					200	DC 100	●
TB115-UJZ	115	111 ± 3	70	180	200	AC 125	●
TB115-UHZ					200	DC 100	●
TB125-UJZ	125	121 ± 3	80	180	200	AC 125	●
TB125-UHZ					200	DC 100	●
TB130-UJZ	130	125 ± 3	85	180	200	AC 125	●
TB130-UHZ					200	DC 100	●
TB136-UJZ	136	131 ± 3	91	180	200	AC 125	●
TB136-UHZ					200	DC 100	●

ATCO

电流-时间曲线 Current-Time Curve

描绘了温度保险丝在 25 ± 2 °C 室温中，不同倍数额定电流下的断开时间。（此曲线仅供参考）
This is an illustrated curve, describing the opening time at Multi-times rated current in the condition of the room Temp. 25 °C. (This curve is for reference only)

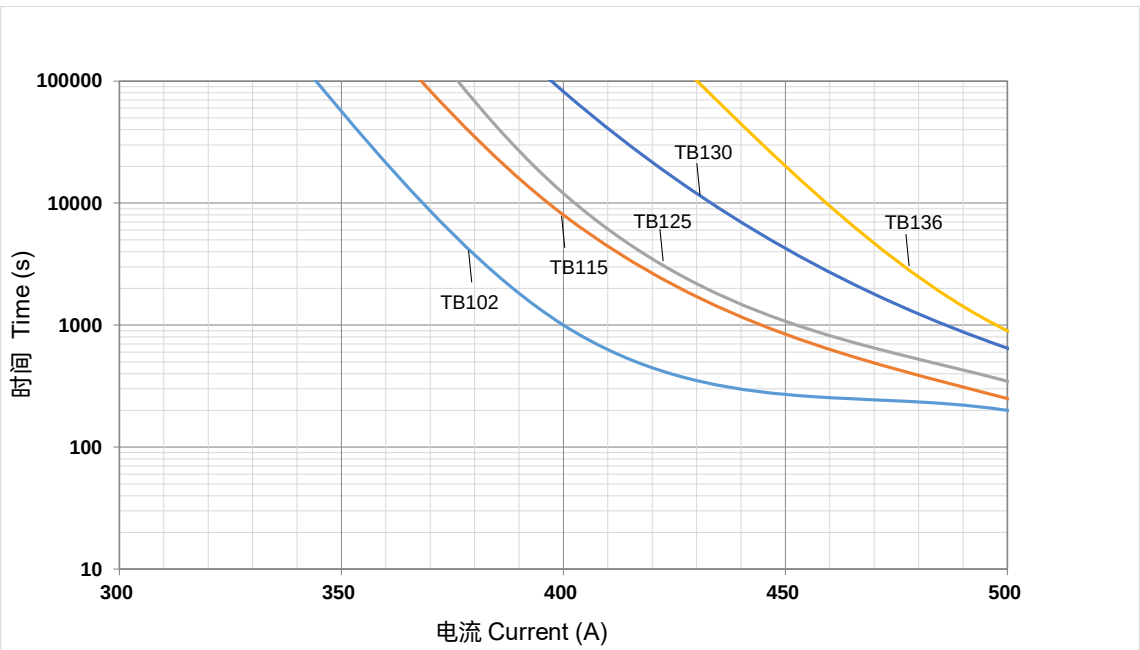

厦门赛尔特电子有限公司版权所有
All Rights Reserved by Xiamen SET Electronics Co., Ltd. 2021-2023 V2.1

包装信息 Packaging Information

项目 Item	吸塑盘 Tray	纸箱 Carton
尺寸 Dimensions (mm)	434 × 232 × 18	450 × 245 × 200
数量 Quantity (PCS)	10	100
毛重 Gross Weight (kg):		7.6 ± 10%

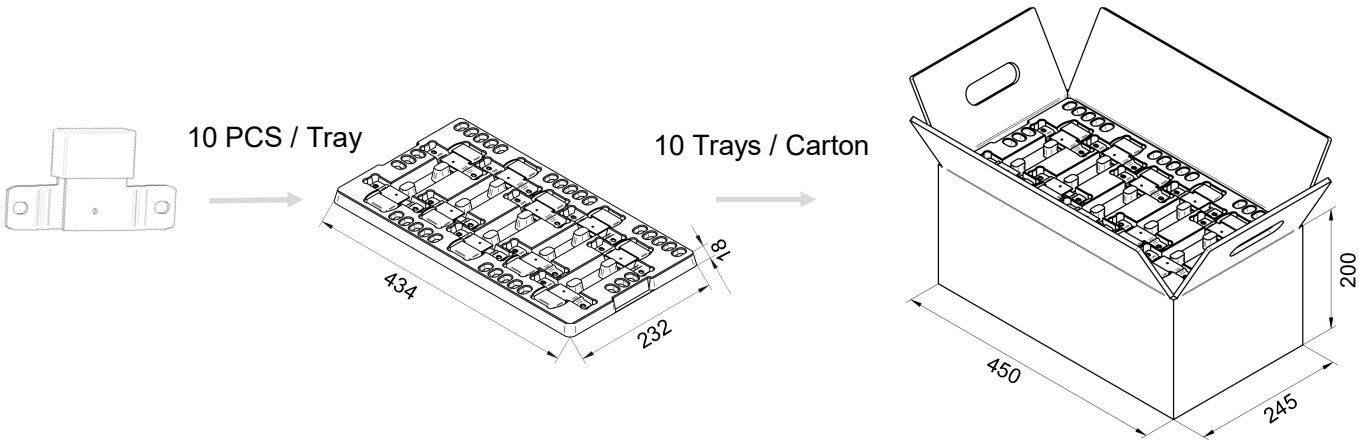

厦门赛尔特电子有限公司版权所有
All Rights Reserved by Xiamen SET Electronics Co., Ltd. 2021-2023 V2.1

包装信息 Packaging Information

项目 Item	PE袋 PE Bag	纸盒 Box	纸箱 Carton
尺寸 Dimensions (mm)	85 × 0.06	165 × 245 × 67	355 × 260 × 385
数量 Quantity (PCS)	8	80	800
毛重 Gross Weight (kg):			27.5 ± 10%

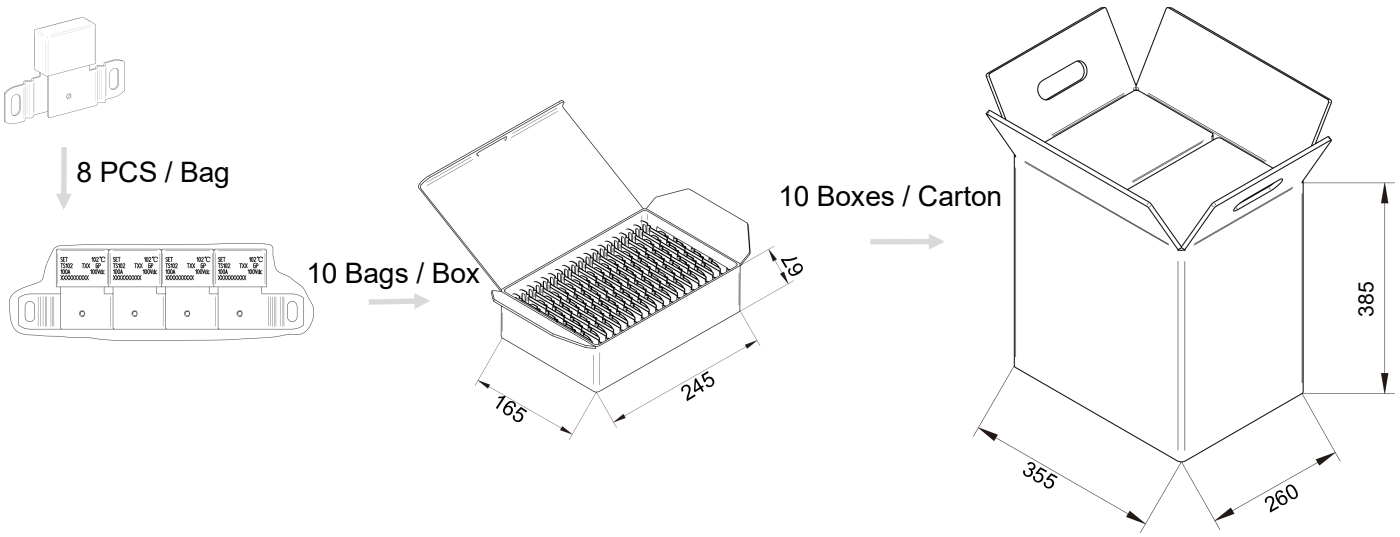

厦门赛尔特电子有限公司版权所有
All Rights Reserved by Xiamen SET Electronics Co., Ltd. 2021-2023 V2.1