Mini Fuses

超小型熔断体

- 塑料壳
- 快断与慢断
- 额定电流：(0.1 ~ 10) A
- 额定电压：(125 ~ 400) VAC
- 低分断
- 无铅，符合RoHS＆REACH要求

- Plastic Case
- Fast Acting and Time-Lag
- Rated Current: (0.1 ~ 10) A
- Rated Voltage: (125 ~ 400) VAC
- Low Breaking Capacity
- Lead-free (Pb-free), RoHS & REACH Compliant

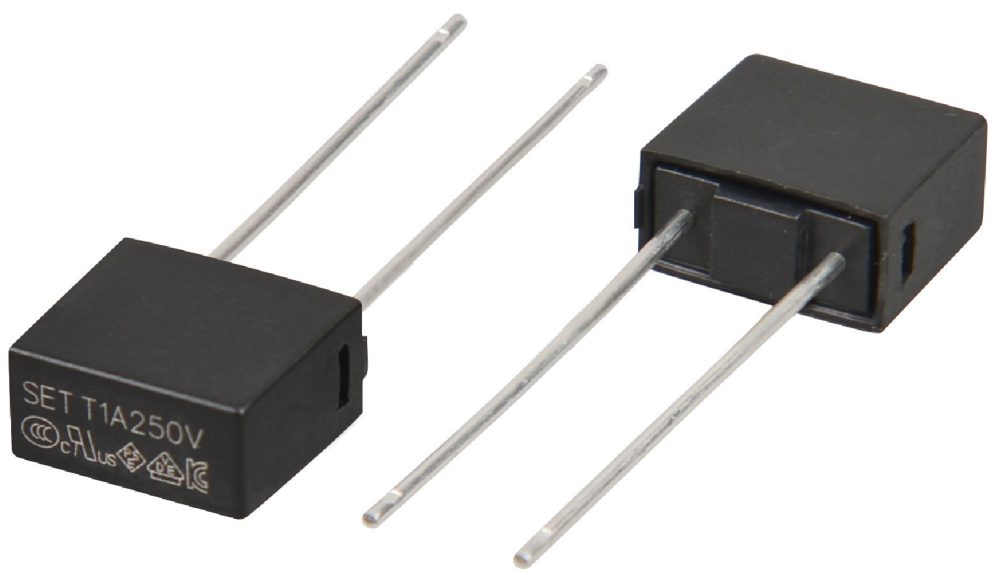

SET safe | SET fuse

赛尔特

制造电路控制及安全保护元器件 提供电路安全解决方案

Providing a Total Solution for High Standard Safety Circuit Protection

超小型熔断体
Sub-miniature Fuse-links (SFL)

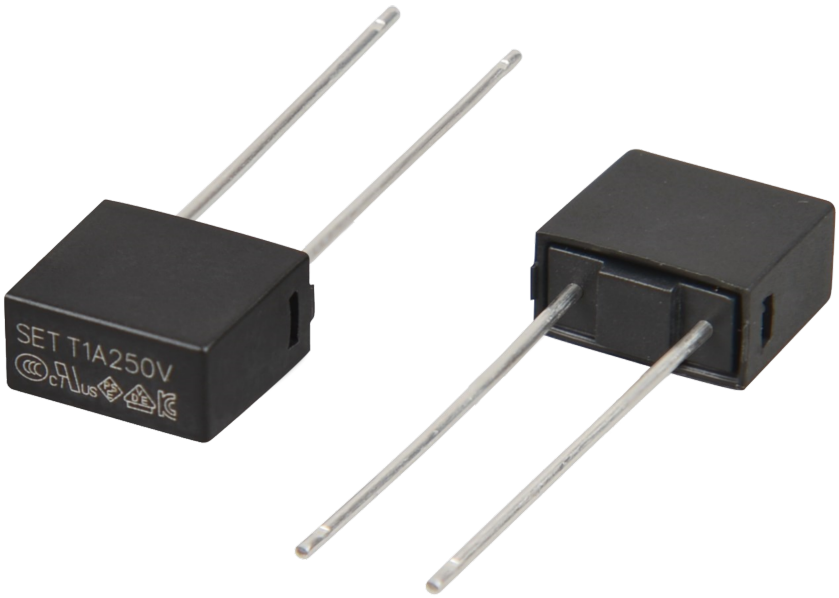

特征 Features

- 塑料壳 Plastic Case
- 快断与慢断 Fast Acting and Time-Lag
- 额定电流：(0.1 ~ 10) A Rated Current: (0.1 to 10) A
- 额定电压：(125 ~ 400) VAC Rated Voltage: (125 to 400) VAC
- 低分断 Low Breaking Capacity
- 无铅且符合RoHs＆REACH要求 Lead-free (Pb-free), RoHS & REACH Compliant

Miniature Fuses

厦门赛尔特电子有限公司版权所有
All Rights Reserved by Xiamen SET Electronics Co., Ltd. 2021-2023 V2.2

超小型熔断体
Sub-miniature Fuse-links (SFL)

超小型熔断体特性与型号概览
Sub-miniature Fuse-links (SFL) Feature & Model List Overview

额定电流 Rated Current (A) \ 页码 Page	12	15
40.00	○	○
30.00	○	○
25.00	○	○
20.00	○	○
16.00	○	○
15.00	○	○
13.00	○	○
12.50	○	○
12.00	○	○
10.00	SPF478-10A	SPT478-10A
8.00	SPF478-8A	SPT478-8A
7.00	○	○
6.30	SPF478-6.3A	SPT478-6.3A
5.00	SPF478-5A	SPT478-5A
4.00	SPF478-4A	SPT478-4A
3.15	SPF478-3.15A	SPT478-3.15A
3.00	○	○
2.50	SPF478-2.5A	SPT478-2.5A
2.00	SPF478-2A	SPT478-2A
1.60	SPF478-1.6A	SPT478-1.6A
1.25	SPF478-1.25A	SPT478-1.25A
1.00	SPF478-1A	SPT478-1A
0.80	○	SPT478-800mA
0.63	○	SPT478-630mA
0.50	○	SPT478-500mA
0.40	○	SPT478-400mA
0.315	○	SPT478-315mA
0.25	○	SPT478-250mA
0.20	○	SPT478-200mA
0.16	○	SPT478-160mA
0.125	○	SPT478-125mA
0.10	○	SPT478-100mA
U_r(VAC)(VDC) 额定电压 Rated Voltage	125 VAC ~ 400 VAC	
时间特性 Time Feature	快断 Fast Acting	慢断 Time Lag
管身材质 Tube Material	塑料 Plastic Case	
标准 Standards	IEC / UL	
分断能力 Breaking Capacity	35 A ~ 150 A	
外形尺寸(mm) Physical Size	4 × 7 × 8	
产品结构 Product Structure	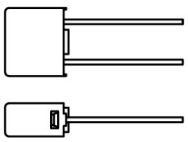	

型号 Model

Miniature Fuses

厦门赛尔特电子有限公司版权所有
All Rights Reserved by Xiamen SET Electronics Co., Ltd. 2021-2023 V2.2

超小型熔断体
Sub-miniature Fuse-links (SFL)

产品描述 Description

小型熔断器(Miniature Fuses)是一种小型的过电流保护装置。它串联在电路中，一般要求电阻小（功耗小），当电路正常工作时，它相当于一根导线，能够长时间稳定地导通电路；当电路不稳定或外部干扰而发生电流波动时，它也应能承受一定范围的过载；只有当电路中出现明显的过载或短路时，小型熔断器(Miniature Fuses)才会动作，通过切断电流来保护电路。
赛尔特公司的小型熔断器(Miniature Fuses)广泛应用于各种电子电器设备的过电流保护，其具有多种安装方式、结构紧凑、性能可靠稳定等特点。赛尔特可提供的小型熔断器(Miniature Fuses)的技术参数：额定电流（0.1~40）A，额定电压（125~600）VAC、（24~600）VDC，安规认证包括cURus、VDE、PSE、CCC、CQC、KC、TUV，同时满足RoHS、REACH要求。

Miniature Fuses is an Over Current Protection device. It is connected in series in the circuit and generally requires low resistance (low power consumption). When the circuit works normally, it is equivalent to a wire, which can conduct the circuit continuously and stably. When the current fluctuates due to circuit instability or external interference, it should also be able to withstand a certain range of overload. Only when overload or short circuit happens, Miniature Fuses can blow fast to protect the circuit.
SETsafe | SETfuse Miniature Fuses is widely used in all kinds of electrical equipment. It has a variety of mounting modes, compact structure, reliable and stable performance. Technical parameters of SETsafe | SETfuse Miniature Fuses: Its rated current ranges from 0.1 A to 40 A, rated voltage ranges from 125 VAC to 600 VAC, and from 24 VDC to 600 VDC, complies with RoHS and REACH, and is approved by cURus, VDE, PSE, CCC, CQC, KC, TUV.

Miniature Fuses

厦门赛尔特电子有限公司版权所有
All Rights Reserved by Xiamen SET Electronics Co., Ltd. 2021-2023 V2.2

术语 Glossary

项目 Item	描述 Description
熔断器 **Fuse**	一种装置，当通过该装置的电流超过规定值，并持续足够的时间，该装置中一个或多个经特殊设计、特殊配比的部件熔断，断开其所接入的电路，从而切断电流。 A device, by the fusing of one or more of its specially designed and proportioned components, opens the circuit in which it is inserted by breaking the current when this exceeds a given value for a sufficient time. —(IEC 60127)
快断型熔断器 **Fast Acting Fuse**	在过载和短路时能很快断开电路的一类熔断器。这类熔断器无法承受一些超载浪涌电流。UL认证或认可的速断型熔断器，通常在额定电流的200%到250%时，会在5秒内断开。IEC标准有两类快断型熔断器： A fuse which opens on overload and short circuits very quickly. This type of fuse is not designed to withstand temporary overload currents associated with some electrical load. UL listed or recognized fast acting fuses would typically open within 5 s when subjected to 200% to 250% of its rated current. IEC has two categories of fast acting fuses: ● F表示快速动作，10倍额定电流时，能在0.001 s到0.01 s之间断开。 F = Fast acting, opens on 10 times rated current within 0.001 s to 0.01 s. ● FF表示非常快速动作,10倍额定电流时，能在0.001 s以内断开。 FF = Very fast acting, opens on 10 times rated current within less than 0.001 s. —(UL 248)
延时型熔断器 **Time-Lag Fuse**	内置时间延迟，允许暂时的、无害的浪涌电流通过而不动作的一类熔断器。在设计时持续过载和短路电流情况下的断开时间应该是：UL认证或认可的延时型熔断器在额定电流的200%到250%下，会在2分钟内断开。IEC标准有两种延时型熔断器： A fuse with a built-in delay that allows temporary and harmless inrush currents to pass without operating. In design, the breaking time under the condition of continuous overload and short-circuit current shall be: UL listed or recognized time delay fuses typically open in 2 minutes Max. when subjected to 200% to 250% of rated current. IEC has two categories of time delay fuses: ● T表示延时，10倍额定电流时，能在0.01 s到0.3 s之间断开。 T = Time-Lag, opens on 10 times rated current within 0.01 s to 0.3 s. ● TT表示长延时，10倍额定电流时，能在0.1 s到1 s之间断开。 TT = Long Time-Lag, opens on 10 times rated current within 0. 1 s to 1 s. —(UL 248)
额定电流 **Rated Current**	熔断器的额定电流是根据其可控制测试条件的截流能力确定的。每个熔断器上都应标上额定电流，它可以是数字、字母、或色码。 The rated current of a fuse identifies its current-carrying capacity based on a controllable set of test conditions. Each fuse is marked with its rated current, this rating can be identified with a numeric, alpha, or color code mark. —(IEC 60127)
额定电压 **Rated Voltage**	熔断器可以使用的最大安全开断电压，超过额定电压将影响断开过载和短路电路的能力。 A Max. open circuit voltage in which a fuse can be used, yet safely interrupt an overcurrent. Exceeding the voltage rating of a fuse impairs its ability to clear an overload or short circuit safely. —(IEC 60127)

Miniature Fuses

厦门赛尔特电子有限公司版权所有
All Rights Reserved by Xiamen SET Electronics Co., Ltd. 2021-2023 V2.2

术语 Glossary

项目 Item	描述 Description
正常工作电流 **Normal Operating Current**	正常条件下接通电路后，电路中流过的电流被称为正常工作电流。在25 °C的条件下，正常工作电流应小于等于80%的额定电流。例如，额定电流为1 A的熔断器不推荐在大于800 mA的电路中使用。如果环境温度较高，则需进一步降额使用。 The normal operating current of a circuit is the level of current drawn (in RMS or dc amperes) after it has been energized and is operating under normal conditions. An operating current of 80% or less of rated current is recommended for operation at 25 °C to avoid nuisance openings. For example, a fuse with a Rated Current of 1 A is usually not recommended in circuits with normal operating currents of more than 800 mA. Further derating is required at elevated ambient Temp.. —(UL 248)
标称熔化热能 **Ampere Squared Seconds I^2t**	在电流平方对给定时间间隔的积分，被称为I^2t。它是熔断所需的热能。熔断I^2t可以是熔化I^2t，飞弧I^2t，或二者之和。 The melting, arcing, or clearing integral of a fuse, termed I^2t, is the thermal energy required to melt, arc, or clear a specific current. It can be expressed as melting I^2t, arcing I^2t or the sum of them, clearing I^2t. —(IEC 60127)
过载 **Overload**	电流超过额定负荷的2到5倍，且保持正常的电流路径。 Can be classified as an overcurrent which exceeds the normal full load current of a circuit by 2 to 5 times its magnitude and stays within the normal current path. —(UL 248)
过电流 **Overcurrent**	在一个电路中，超过正常负载电流的电流称为过电流。过电流包括过载电流和短路电流。 A condition which exists in an electrical circuit when the normal load current is exceeded. Overcurrent take on two separate characteristics-overloads and short circuits. —(UL 248)
短路 **Short Circuit**	将短路是电流不流过正常电路而引起的过电流，它大大超出了正常满载电流数十、数百甚至数千倍。 An overcurrent that leaves the normal current path and greatly exceeds the normal full load current of the circuit by a factor of tens, hundreds, or thousands times. —(UL 248)
飞弧时间 **Arcing Time**	从出现电弧的瞬间到最终电弧熄灭的瞬间所间隔的时间。 The amount of time from the instant the fuse link has melted until the overcurrent is interrupted, or cleared. —(IEC 60127)
熔断时间 **Clearing Time**	熔化时间和飞弧时间之和。 The total time between the beginning of the overcurrent and the final opening of the circuit at rated voltage by an overcurrent protective device. Clearing time is the total of the melting time and the arcing time. —(IEC 60127)
分断能力 **Breaking Capacity of a Fuse-link**	在规定的使用和性能条件下，熔断器在规定电压下能分断的预期电流值（对交流为有效值）。 Value (r.m.s. for AC) of prospective current that a fuse-link is capable of breaking at a stated voltage under prescribed conditions of use and behaviour. —(IEC 60127)

Miniature Fuses

厦门赛尔特电子有限公司版权所有
All Rights Reserved by Xiamen SET Electronics Co., Ltd. 2021-2023 V2.2

过电流保护选型 Selection Guide Of Overcurrent Protection

在正常负载条件下，熔断器必须在电路中正常工作。然而，当过电流时熔断器必须断开电路和承受内部电弧。

Under normal load conditions, the fuse must carry the normal operating current of the circuit without nuisance openings. However, when an overcurrent occurs, the fuse must interrupt the overcurrent and withstand the voltage across the fuse after internal arcing.

正确选择熔断器必须考虑以下项目:

To properly select a fuse, the following items must be considered:

- 额定电压（交流或直流） Rated Voltage (AC or DC)
- 额定电流 Rated Current
- 正常工作电流 Normal Operating Current
- 环境温度 Ambient Temp.
- 过载条件和熔断时间 Overload Conditions and Opening Time
- 短路电流 Available Short Circuit Current
- 熔化热能值 Ampere Squared Seconds(I^2t)
- 脉冲和浪涌特性 Pulse and Inrush Characteristics
- 被保护设备或部件的特性 Characteristics of Protected Equipment or Components
- 安装空间和外形尺寸 Available Board Space and Physical Size
- 标准要求 Standards Requirements

Miniature Fuses

选型流程 Selection Process

步骤 Procedure	解释 Explanation
开始 Start	准备相关设计信息。 Prepare related design information.
安规认证 Safety Approval	根据整机所需的安规认证决定熔断器的安规认证，在此，可初步确定选用IEC规格或UL规格熔断器。 The safety approvals of the fuse shall be determined by the requirement of the end product. Therefore, it is determined preliminarily to choose fuse of IEC standard or UL standard.
尺寸 Dimensions	● 设计时电路中空间的限制。 The space limit of circuit in design. ● 安装方式。 Mounting mode.
额定电压 Rated Voltage	额定电压应大于等于有效的电路电压。 The rated voltage of the fuse shall be greater than, or equal to the effective circuit voltage.
分断能力 Breaking Capacity	分断能力的电流应大于电路中的最大故障电流。 The Breaking Capacity of the fuse should exceed the max. fault current of the circuit.

厦门赛尔特电子有限公司版权所有
All Rights Reserved by Xiamen SET Electronics Co., Ltd. 2021-2023 V2.2

初步选择型号 Initial Selection for Fuse Type	整机开关机时，电路中是否存在开机浪涌？开机浪涌在某些电路中是正常的，这种场合应使用慢断型。 Is there inrush current in the circuit when the machine is turned on and off? In some circuit, the inrush current is normal, so time-lag fuse should be used in such case.
确定额定电流上限I_U Upper Limit for Rated Current I_U	熔断器必须切断的电流及持续时间（该条件由设计人员依具体电路的保护需求而定），参考相应型号的时间电流曲线，取满足要求的最大额定电流作为上限值I_U。 For the current that the fuse must cut off and its duration, please refer to the time-current curve of the corresponding model, and take the max. rated current, which meets the requirement, as the upper limit I_U. Such conditions are determined by the designer according to the protection requirement of the specific circuit.
确定额定电流下限 I_L Lower Limit for Rated Current I_L	● 通过熔断器的稳态电流（依具体电路而定）。 Steady state current through a fuse (based on the specific circuit). ● IEC规格及UL规格熔断器的额定电流的差别，参考“稳态电流”。 The difference of rated current for fuse designed to IEC standard and UL standard, refer to STEADY STATE CURRENT. ● 环境温度对熔断器承载能力的影响，参考“环境温度”。 Effect of ambient Temp. on current-carrying capacity of fuse, refer to AMBIENT TEMP.. ● 脉冲（冲击电流、浪涌电流、起动电流、及电流瞬变值等）对熔断器寿命的影响，参考“脉冲”。 Effect of pulse (including surge currents, starting current, inrush currents and transients) on life time of fuse, refer to PULSE. ● 起动电流及持续时间与相应型号的时间电流曲线比较。 “Starting current” and duration should be compared to time-current curve of corresponding fuse. 综合考虑以上5个因素后，选出满足要求的最小额定电流作为下限I_L。 According to the above 5 factors, to select the min. rated current which meets the requirement as the lower limit of I_L.
SET Mini Fuses具体型号及电流 SET Mini Fuses Model & Rated Current	综合考虑以上因素后，选出最合适的型号及额定电流。 According to the above factors, choose the most appropriate model and rated current. ● 当$I_U \geq I_L$时，则可选用I_L到I_U区间内的任何一规格的熔断器。 When $I_U \geq I_L$, any rating is workable from the range of I_L to I_U. ● 当$I_U < I_L$时，则建议选用其它型号的熔断器。 When $I_U < I_L$, recommend to select another type fuse.
验证 Verifying	样品应在实际电路中试运行。 The sample shall be pilot run in the actual circuit.
完成 End	

Miniature Fuses

厦门赛尔特电子有限公司版权所有
All Rights Reserved by Xiamen SET Electronics Co., Ltd. 2021-2023 V2.2

稳态电流 Steady State Current

在实际应用中和实验室之间有不同的条件，如：

There are different conditions in actual application and laboratory test, such as:

- 有时使用熔断器盒；
  Fuse-holder;
- 电路中的电线横截面积；
  Connecting cable size;
- 熔断器夹的接触电阻等。
  Contacting resistance between fuse clip and fuse, etc.

考虑到以上因素，故在25 °C条件下所选用的熔断器应满足如下条件才可使熔断器持续可靠地工作：

Considering above factors, when selecting a fuse at a 25 °C ambient Temp., to ensure the fuse operated continuously and properly, the following conditions shall be required:

- IEC规格：熔断器的额定电流I_N=稳态电流/0.9。
  Fuse designed to IEC standard: Rated Current (I_N) = steady state current of circuit/0.9.
- UL规格：熔断器的额定电流I_N=稳态电流/0.75。
  Fuse designed to UL standard: Rated Current (I_N) = steady state current of circuit/0.75.

环境温度 Ambient Temperature

熔断器的电流承载能力测试是在环境温度25 °C条件下进行的，而熔断器的电流承载能力是会受环境温度影响的。环境温度越高，熔断器的寿命越短，承载能力就越低。所以选用熔断器时应考虑熔断器周边的环境温度，环境温度对各类熔断器承载能力的影响如下图所示：

The current carrying capacity tests of a fuse are performed at 25 °C and will be effected by the changes of the ambient Temp.. The higher the ambient Temp. is, the shorter the fuse life time will be, and the lower the current carrying capacity will be. So the ambient Temp. shall be considered for proper fuse selection. Refer to the following charts showing its effect on the current carrying capacity of all kinds of fuse:

- 图1表示环境温度对传统慢断及中等慢断型熔断器承载能力及5I_N熔断时间的影响。
  Fig.1 effect on rating and opening time in 5I_N of traditional time-lag and medium Time-Lag fuse.
- 图2表示环境温度对快速熔断型熔断器承载能力及5I_N熔断时间的影响。
  Fig.2 effect on rating and opening time in 5I_N of fast acting fuse.

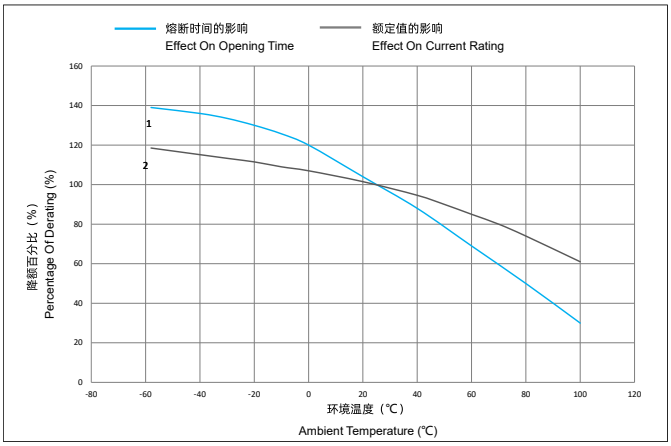

图1 FIGURE 1

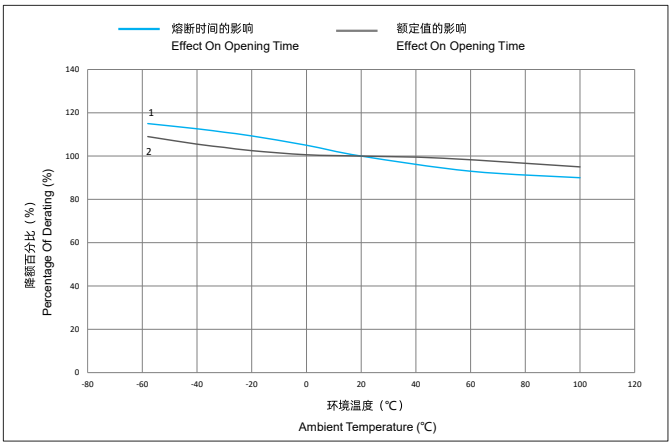

图2 FIGURE 2

脉冲 Pulse

脉冲产生的热循环，从而产生机械疲劳影响熔断器的寿命。设计时应使脉冲I^2t远远小于熔断器标称熔化热能I^2t。熔断器寿命（可承受的脉冲循环次数）与U（脉冲I^2t值与熔断器I^2t值之比率）的关系参照表A。表B提供各种典型脉冲波形的I^2t值近似计算公式：

Pulse produces thermal cycling and mechanical fatigue which could affect the life time of fuse. The selected fuse should have an I^2t value much greater than the I^2t value of pulse. Refer to Table A showing the relationship between the life time of fuse (the endurable times of pulse shock) and U (ratio between pulse I^2t value and fuse I^2t value). The I^2t value of a fuse presented in this catalog may be for your reference. The I^2t value of a pulse can be approximated from the following formulas for a typical wave shape, refer to Table B.

Miniature Fuses

厦门赛尔特电子有限公司版权所有
All Rights Reserved by Xiamen SET Electronics Co., Ltd. 2021-2023 V2.2

表1 TABLE 1

可承受脉冲次数 Endurable times of pulse shock	U（比率Ratio）
100000	20%
10000	30%
1000	40%

注：脉冲间隔时间必须足够长（5 s – 10 s），以利于脉冲产生的热量散失。

Note: Adequate interval (5 s - 10 s) must be required between pulse events to allow the heat from the previous event to dissipate.

表2 TABLE 2

波形 Wave Shape	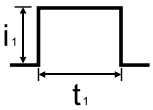 矩形波 Rectangle wave	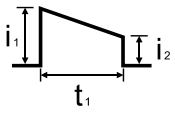 梯形波 Trapezoid wave	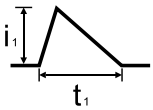 三角形波 Triangle wave	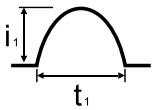 正弦波 Sine wave	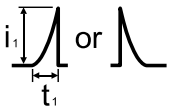 变形波 Distortion wave	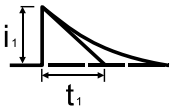 充、放电波 Charge or Discharge wave
I^2t计算公式 I^2t Formula	$i_1^2t_1$	$(1/3)(i_1^2+i_1i_2+i_2^2)t_1$	$(1/3)i_1^2t_1$	$(1/2)i_1^2t_1$	$(1/5)i_1^2t_1$	$(1/2)i_1^2t_1$

验证 Verifying

所选定的产品必须在实际被保护电路中进行测试，以验证所选择的熔断器。此验证应包括正常条件及故障条件下的测试，以确保所选择的熔断器在被保护电路中能正常运行。

The selected sample shall be tested in the actual circuit to verify the right selection. The testing should include the tests under normal and fault conditions to ensure that the fuse will operate properly in the circuit.

厦门赛尔特电子有限公司版权所有
All Rights Reserved by Xiamen SET Electronics Co., Ltd. 2021-2023 V2.2

注意

ATTENTION

检测 Inspection

冷电阻测试 Cold Resistance Test

a. 环境温度为(23±2) °C，测试电流不大于熔断器额定电流的10%。

Applied current shall be less than 10% of rated current, at ambient Temp. of (23±2) °C.

b. 采用四端测试法 (4-Wire) Resistance Measurement.

使用 Usage

a. 通电情况下请勿直接触碰熔断器本体或引线，防止烫伤或触电。

Do not touch the fuse body or lead wire when power on, avoiding scald or electric shock.

b. 气压在80 kPa 到106 kPa，对应海拔为+2000 m至- 500 m。

Air pressure is 80 kPa to 106 kPa. These values represent an altitude of +2000 m to -500 m, respectively.

更换 Replacement

基于安全原因，熔断器是不可修复的产品，替换时应使用同类别同型号的产品。

For safety reasons, the Fuse is the non-resettable product, please ensure that the alternative Fuse is the same type when replace it.

贮存 Storage

熔断器的贮存应避免高温、高湿、日光直射和腐蚀性气体的场合，以免影响引脚可焊性，产品购入后请于1年内使用完毕。

Please store the fuse in the environment without high temperature, high humidity or corrosive gas, to avoid reducing the solderability of the lead wire. Please use them up within 1 year after receiving the goods.

厦门赛尔特电子有限公司版权所有
All Rights Reserved by Xiamen SET Electronics Co., Ltd. 2021-2023 V2.2

安装 Installation

机械应力 Mechanical stress

安装过程和安装后不宜对熔断器本体施加机械应力。

Do not apply mechanical stress to the fuse body during or after the installation.

焊接参数 Soldering Parameters

波峰焊参数 Wave soldering Parameters (仅供参考 For Reference Only)

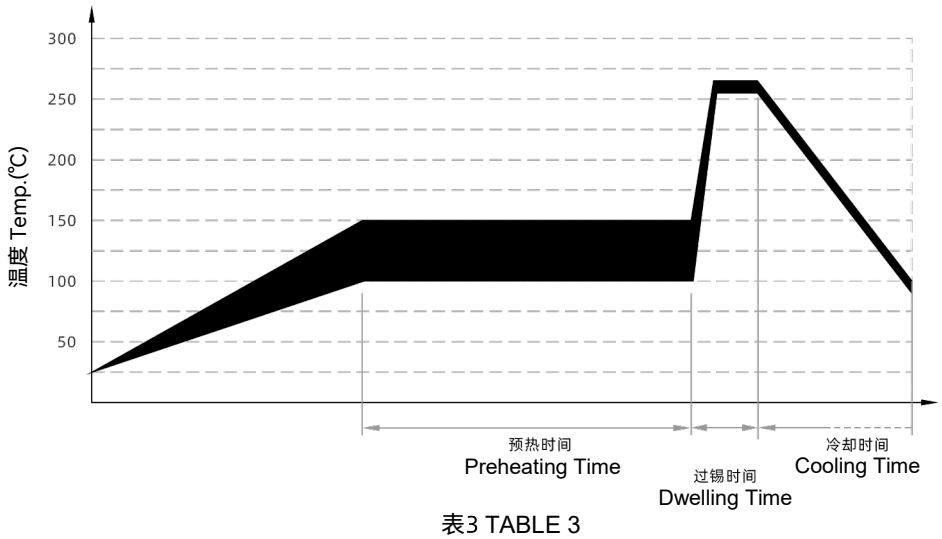

表3 TABLE 3

项目 Item	温度 Temp. （°C）	时间 Time （s）
预热 Preheating	100 - 150	60 - 180
过锡 Dwelling	255 - 265	4 - 8

推荐的手工焊参数 Recommended Soldering Parameters

烙铁温度 Solder Iron Temp.：(350 ± 5) °C

焊接时间 Soldering Time：≤ 5 s

引脚弯曲 Lead Wire Bending

如果要弯折引脚，那么应确保弯折处与主体间的距离，如下表。
If the lead wire has to be bent, please pay attention to the distance between body and the bending point. Refer to the following table.

径向型 Radial Type
尺寸 Dimension (mm) 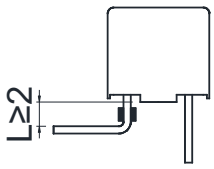

安装位置 Installation Position

勿将熔断器安装在可能经常出现剧烈振动的位置。
Do not install the fuse on a location that may often subject to severe continuous vibration.

厦门赛尔特电子有限公司版权所有
All Rights Reserved by Xiamen SET Electronics Co., Ltd. 2021-2023 V2.2

超小型熔断体
Sub-miniature Fuse-links (SFL)

SPF478系列 Series，快断 Fast Acting，塑料壳 Plastic Case

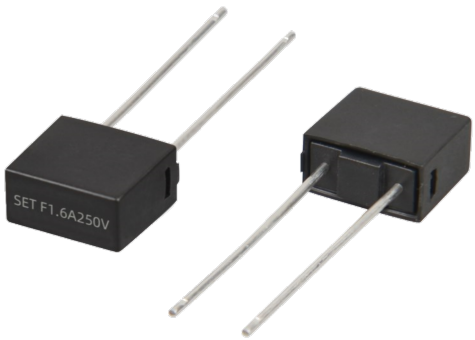

尺寸 Dimensions (mm)

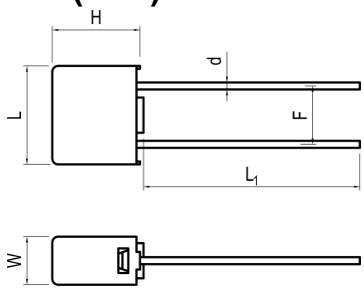

L	L_1	W	H	d	F
8.4±0.5	18.5±1.0	4.1±0.3	7.35±0.50	Φ0.60±0.05	5.08±0.20

关键特性 Key Features

- 体积小 Miniature Size
- 快断 Fast Acting
- 执行标准：IEC 60127-3/Sheet 3、UL248-14
  Designed to IEC 60127-3/Sheet 3 and UL248-14
- 无铅 Lead-free (Pb-free)
- 环保型产品 RoHS & REACH Compliant

应用 Applications

- 电源 Power Supply
- 家电 Household Appliance
- 通用照明 General Lighting
- 智能家居 Smart Home
- 办公设备 Office Equipment
- 电动工具 Electric Tool
- 医疗设备 Medical Equipment
- 仪器仪表 Instruments and Apparatuses

型号说明 Product Number System

SPF478 F 1A 250V

- 额定电压 Rated Voltage
- 额定电流 Rated Current
- 快断 Fast Acting
- 产品系列 Product Series

结构图 Structure

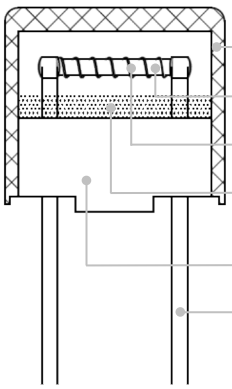

- 外壳 Case
- 纤维线 Fiber Wire
- 熔体 Element
- 填料 Filler
- 底座 Base
- 引线 Radial Lead

安规认证 Agency Approvals

安规认证 Agency Approvals	认证号 Agency File Number	电流范围 Ampere Range
c UL us	待定 Pending	1 A ~ 10 A
DVE	待定 Pending	1 A ~ 10 A
CCC	待定 Pending	1 A ~ 10 A

时间电流特性曲线 Time Current Curve

仅供参考 For Reference Only

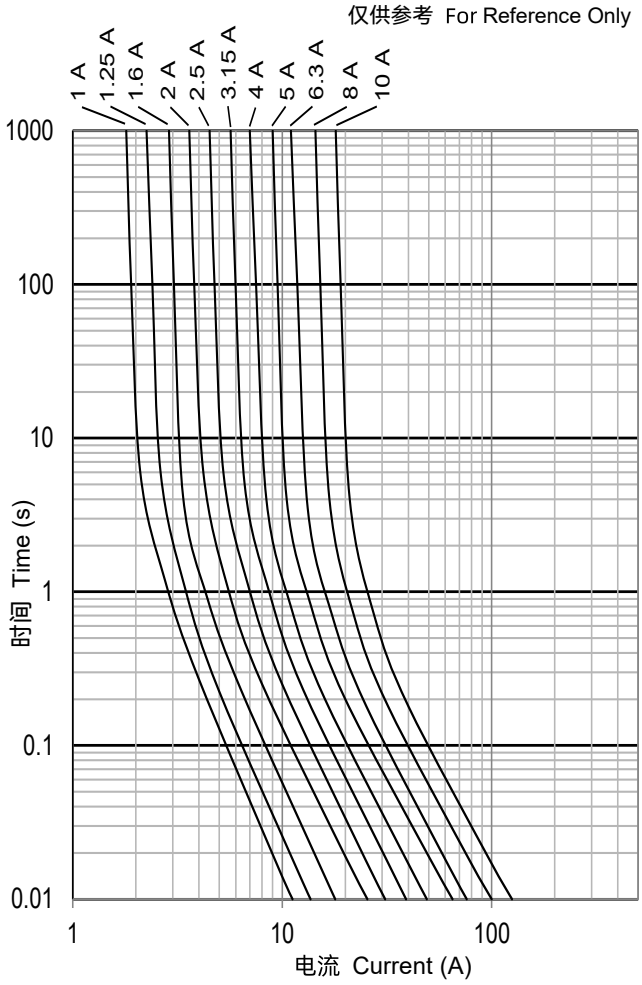

厦门赛尔特电子有限公司版权所有
All Rights Reserved by Xiamen SET Electronics Co., Ltd. 2021-2023 V2.2

Miniature Fuses

技术参数 Specifications

系列 Series	额定电流 Rated Current	最大压降 Max. Voltage Drop [a]	平均熔化热能值 Average Typical Melting I^2t [b]	安规认证 Agency Approvals			环境 Environmental	
				CCC	VDE	cURus	RoHS	REACH
	(A)	(mV)	(A^2sec)	CCC	VDE	cURus		
SPF478	1	280	1.4	○	○	○	●	●
SPF478	1.25	280	2.1	○	○	○	●	●
SPF478	1.6	250	3.6	○	○	○	●	●
SPF478	2	240	6.8	○	○	○	●	●
SPF478	2.5	200	11.3	○	○	○	●	●
SPF478	3.15	180	18.9	○	○	○	●	●
SPF478	4	160	27.2	○	○	○	●	●
SPF478	5	150	50	○	○	○	●	●
SPF478	6.3	130	59.5	○	○	○	●	●
SPF478	8	100	103	○	○	○	●	●
SPF478	10	85	170	○	○	○	●	●

a: 最大压降（环境温度23 °C时，在额定电流下测得）。
Max. Voltage Drop (voltage drop was measured at 23 °C ambient temp. at rated current).

b: I^2t是在10倍额定电流测试下得到的。I^2t value is measured at 10 I_N.

分断能力 Breaking Capacity:

IEC标准Standard: 35 A @ 250 Vac or 10 I_N @ 250 Vac Whichever is Greater

UL标准Standard: 150 A @ 125 V / 250 V / 300 V / 350 V / 400 V

○: 待定 Pending

熔断特性 Pre-arcing Time/Current Characteristic

额定电流 Rated Current	2.1I_N	2.75I_N		4I_N		10I_N
	最大 Max.	最小 Min.	最大 Max.	最小 Min.	最大 Max.	最大 Max.
1 A ~ 5 A	30 minutes	10 ms	3 s	3 ms	300 ms	20 ms
6.3 A ~ 10 A	30 minutes	50 ms	10 s	5 ms	400 ms	20 ms

+86 592-571-5838 www.SETsafe.com www.SETfuse.com E-mail : sales@SETfuse.com

厦门赛尔特电子有限公司版权所有
All Rights Reserved by Xiamen SET Electronics Co., Ltd. 2021-2023 V2.2

包装信息 Packaging Information

尺寸 Dimensions (mm)

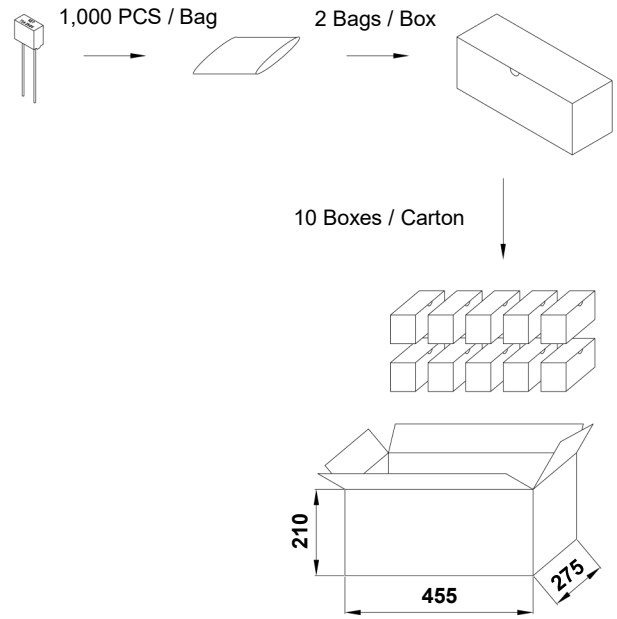

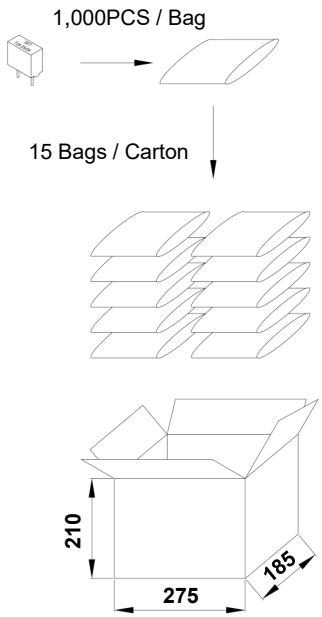

长脚 Long Leg			
项目 Item	PE袋 Bag	盒 Box	箱 Carton
数量 Q'ty (PCS)	1,000	2,000	20,000
毛重 Gross Weight (kg)		8.0 ± 10%	

短脚 Short Leg		
项目 Item	PE袋 Bag	箱 Carton
数量 Q'ty (PCS)	1,000	15,000
毛重 Gross Weight (kg)		4.6 ± 10%

尺寸 Dimensions (mm)

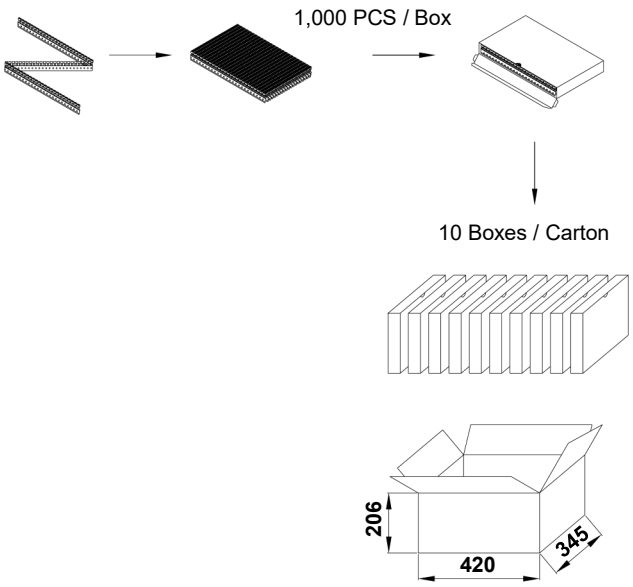

编带 Taping		
项目 Item	盒 Box	箱 Carton
数量 Q'ty (PCS)	1,000	10,000
毛重 Gross Weight (kg)		6.0 ± 10%

+86 592-571-5838 www.SETsafe.com www.SETfuse.com E-mail : sales@SETfuse.com

厦门赛尔特电子有限公司版权所有
All Rights Reserved by Xiamen SET Electronics Co., Ltd. 2021-2023 V2.2

超小型熔断体
Sub-miniature Fuse-links (SFL)

SPT478系列 Series，慢断 Time-Lag，塑料壳 Plastic Case

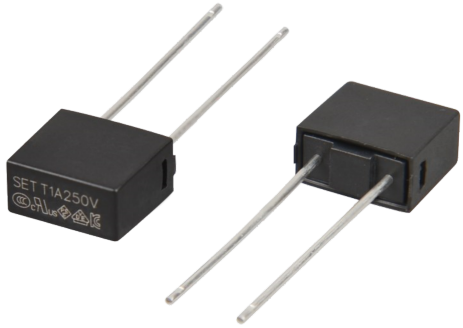

尺寸 Dimensions (mm)

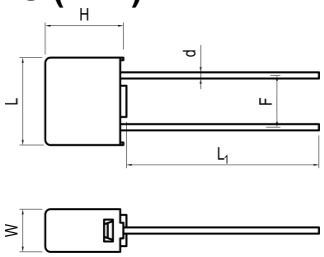

L	L_1	W	H	d	F
8.4±0.5	18.5±1.0	4.1±0.3	7.35±0.50	Φ0.60±0.05	5.08±0.20

关键特性 Key Features

- 体积小 Miniature Size
- 慢断 Time-Lag
- 抗浪涌 Surge Protection
- 执行标准：IEC 60127-3/Sheet 4、UL248-14
  Designed to IEC 60127-3/Sheet 4 and UL248-14
- 无铅 Lead-free (Pb-free)
- 环保型产品 RoHS & REACH Compliant

应用 Applications

- 电源 Power Supply
- 家电 Household Appliance
- 防雷器 SPD
- 通用照明 General Lighting
- 智能家居 Smart Home
- 办公设备 Office Equipment
- 电动工具 Electric Tool

型号说明 Product Number System

SPT478 T 1A 250V

- 额定电压 Rated Voltage
- 额定电流 Rated Current
- 慢断 Time-Lag
- 产品系列 Product Series

结构图 Structure

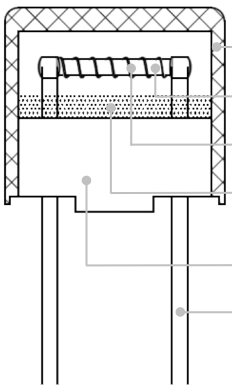

- 外壳 Case
- 纤维线 Fiber Wire
- 熔体 Element
- 填料 Filler
- 底座 Base
- 引线 Radial Lead

安规认证 Agency Approvals

安规认证 Agency Approvals	认证号 Agency File Number	电流范围 Ampere Range
c UL us	E345932	100 mA ~ 10 A
VDE	40049409	100 m A ~ 10 A
PSE	PSE18021398 PSE18021397	1 A ~ 5 A 6.3 A ~ 10 A
CCC	2020980207000070[a]	100 m A ~ 10 A
KC	SU05023-18002 SU05023-18005 SU05023-18001 SU05023-18003 SU05023-18004	100 mA 125 mA ~ 800 mA 1 A ~ 2.5 A 3.15 A ~ 6.3 A 8 A ~ 10 A

备注：“a”为强制性认证产品符合性自我声明编号。
Remark: “a” is self-declaration number for conformity of Compulsory certification products.

时间电流特性曲线 Time Current Curve

仅供参考 For Reference Only

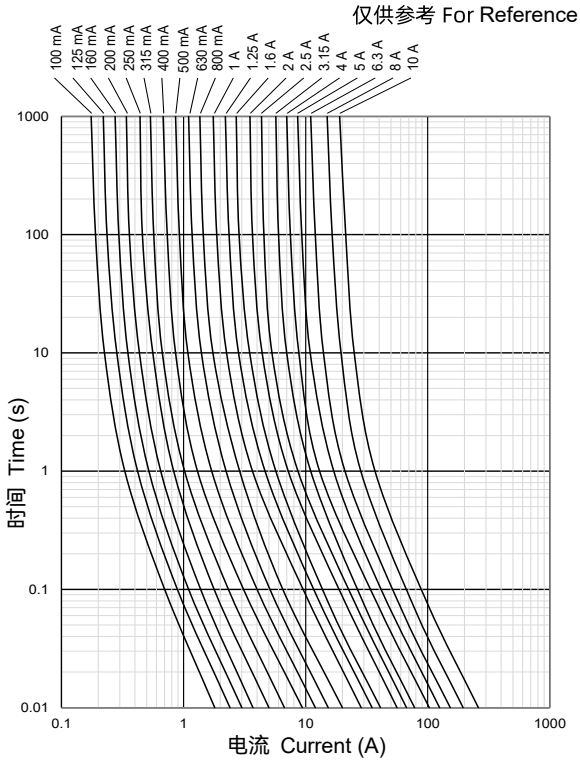

厦门赛尔特电子有限公司版权所有
All Rights Reserved by Xiamen SET Electronics Co., Ltd. 2021-2023 V2.2

Miniature Fuses

技术参数 Specifications

系列 Series	额定电流 Rated Current	最大压降 Max. Voltage Drop [a]	平均熔化热能值 Average Typical Melting I^2t [b]	安规认证 Agency Approvals					环境 Environmental	
				CCC	VDE	KC	PSE	cURus	RoHS	REACH
	(A)	(mV)	(A²sec)							
SPT478	0.1	350	0.039	●	●	●		●	●	●
SPT478	0.125	300	0.069	●	●	●		●	●	●
SPT478	0.16	280	0.11	●	●	●		●	●	●
SPT478	0.2	260	0.16	●	●	●		●	●	●
SPT478	0.25	240	0.29	●	●	●		●	●	●
SPT478	0.315	220	0.5	●	●	●		●	●	●
SPT478	0.4	200	0.91	●	●	●		●	●	●
SPT478	0.5	190	1.51	●	●	●		●	●	●
SPT478	0.63	180	2.38	●	●	●		●	●	●
SPT478	0.8	160	3.78	●	●	●		●	●	●
SPT478	1	140	9.0	●	●	●	●	●	●	●
SPT478	1.25	130	13.3	●	●	●	●	●	●	●
SPT478	1.6	120	17.9	●	●	●	●	●	●	●
SPT478	2	100	34.8	●	●	●	●	●	●	●
SPT478	2.5	100	49.4	●	●	●	●	●	●	●
SPT478	3.15	100	66.5	●	●	●	●	●	●	●
SPT478	4	100	112	●	●	●	●	●	●	●
SPT478	5	100	165	●	●	●	●	●	●	●
SPT478	6.3	100	250	●	●	●	●	●	●	●
SPT478	8	80	416	●	●	●	●	●	●	●
SPT478	10	75	750	●	●	●	●	●	●	●

a: 最大压降（环境温度23 °C时，在额定电流下测得）。
Max. Voltage Drop (voltage drop was measured at 23 °C ambient temp. at rated current).

b: I^2t是在10倍额定电流测试下得到的。I^2t value is measured at 10 I_N.

分断能力 Breaking Capacity:

CCC / VDE / PSE / KC: 35 A @ 250 Vac or 10 I_N @ 250 Vac Whichever is Greater

UL / cUL: 150 A @ 125 V / 250 V / 300 V / 350 V / 400 V

熔断特性 Pre-arcing Time/Current Characteristic

额定电流 Rated Current	2.1I_N	2.75I_N		4I_N		10I_N	
	最大 Max.	最小 Min.	最大 Max.	最小 Min.	最大 Max.	最小 Min.	最大 Max.
0.1 A ~ 6.3 A	2 minutes	400 ms	10 s	150 ms	3 s	20 ms	150 ms
8 A ~ 10 A	5 minutes	1 s	20 s	150 ms	3 s	20 ms	150 ms

厦门赛尔特电子有限公司版权所有
All Rights Reserved by Xiamen SET Electronics Co., Ltd. 2021-2023 V2.2

包装信息 Packaging Information

尺寸 Dimensions (mm)

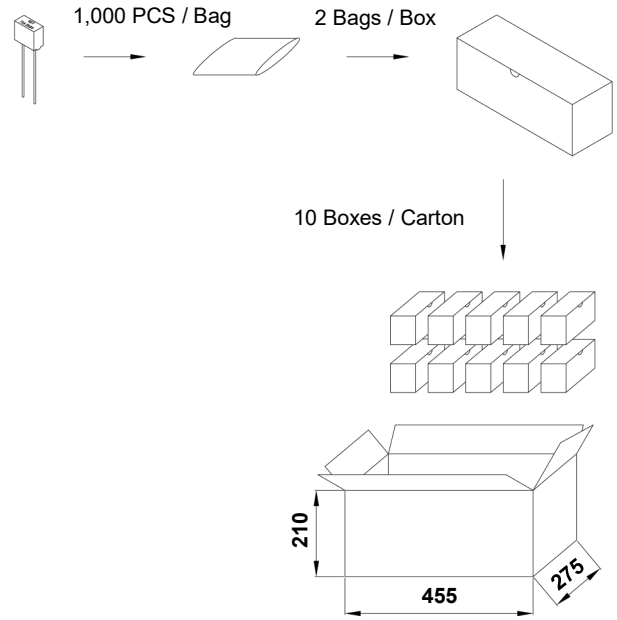

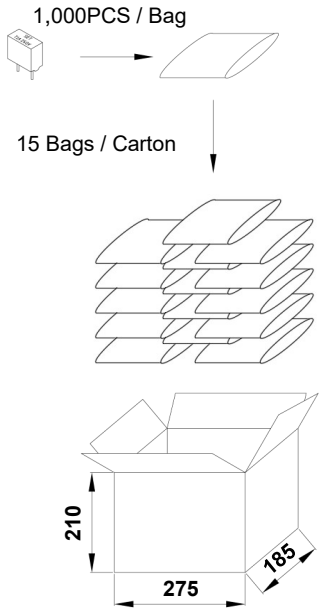

长脚 Long Leg			
项目 Item	PE袋 Bag	盒 Box	箱 Carton
数量 Q'ty (PCS)	1,000	2,000	20,000
毛重 Gross Weight (kg)		7.6 ± 10%	

短脚 Short Leg		
项目 Item	PE袋 Bag	箱 Carton
数量 Q'ty (PCS)	1,000	15,000
毛重 Gross Weight (kg)		4.6 ± 10%

尺寸 Dimensions (mm)

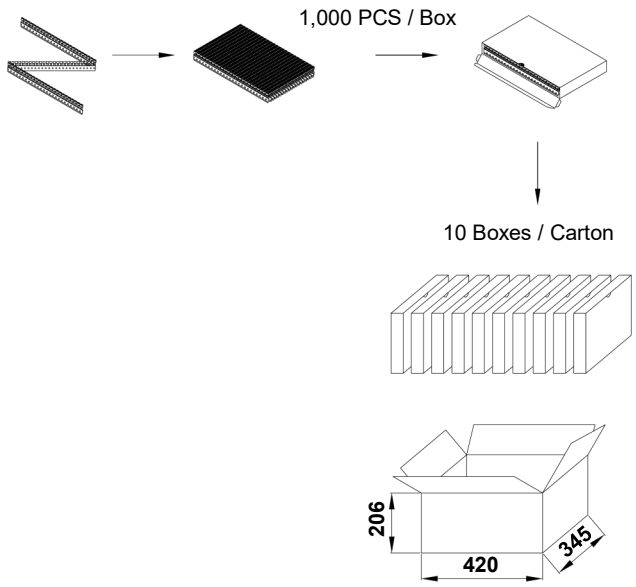

编带 Taping		
项目 Item	盒 Box	箱 Carton
数量 Q'ty (PCS)	1,000	10,000
毛重 Gross Weight (kg)		6.0 ± 10%

+86 592-571-5838 www.SETsafe.com www.SETfuse.com E-mail : sales@SETfuse.com

厦门赛尔特电子有限公司版权所有
All Rights Reserved by Xiamen SET Electronics Co., Ltd. 2021-2023 V2.2

www.SETsafe.com
www.SETfuse.com

20+

OVER 20 YEARS OF DESIGNING, MANUFACTURING AND SELLING OF CIRCUIT PROTECTION COMPONENTS
超过20年的设计、制造、销售电路保护元器件

40+

SOLD TO MORE THAN 40 COUNTRIES AND REGIONS
40多个国家和地区的客户选择赛尔特品牌

自动化

AUTOMATIC PROCESS PRODUCTION
自动化工序生产

500

A BRAND CHOSEN BY FORTUNE 500 COMPANIES
世界500强企业选择品牌

厦门火炬高新区（翔安）产业区翔安西路8067, 8001号
NO. 8067, 8001 West Xiang'an Road,Torch High-tech industrial District, Xiang'an 361101 Xiamen P.R. China
www.SETsafe.com www.SETfuse.com
+ 86 592-5715-838 sales@SETfuse.com

厦门赛尔特电子有限公司版权所有
All Rights Reserved by Xiamen SET Electronics Co., Ltd. V2.0 2021-2023

SET safe | SET fuse
赛尔特